MXHV9910 30VDC DEMO BOARD

LED +

6 to 15 VDC
900mA Max.

LED -

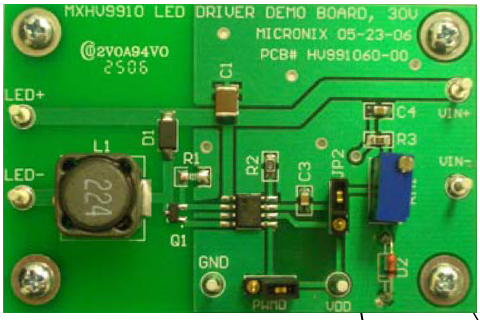

Vin+

EXT. POWER
12 to 30 VDC

Vin-

VDD MONITOR

EXTERNAL (**RA1**)
CURRENT SENSE
THRESHOLD ADJUST

JP1

EXTERNAL PWMD CONTROL INPUT
Connecting the PWMD pin to VDD enables the converter. Applying a PWM TTL signal between the PWMD pin and GND adjusts the average output current to the LED's according to the duty cycle.

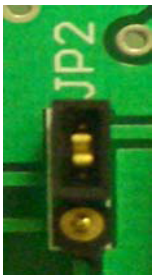

JP2 INTERNAL / EXTERNAL CURRENT THRESHOLD SELECT
When the LD pin is connected to RA1 through JP2, LED current may be reduced in a linear fashion by adjusting RA1.
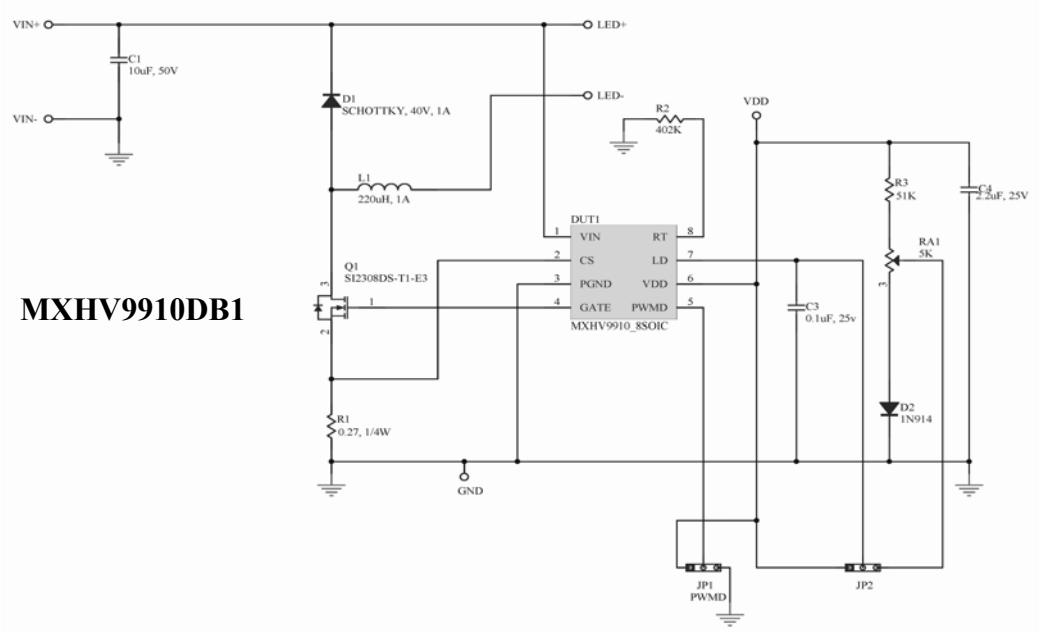
MXHV9910DB1