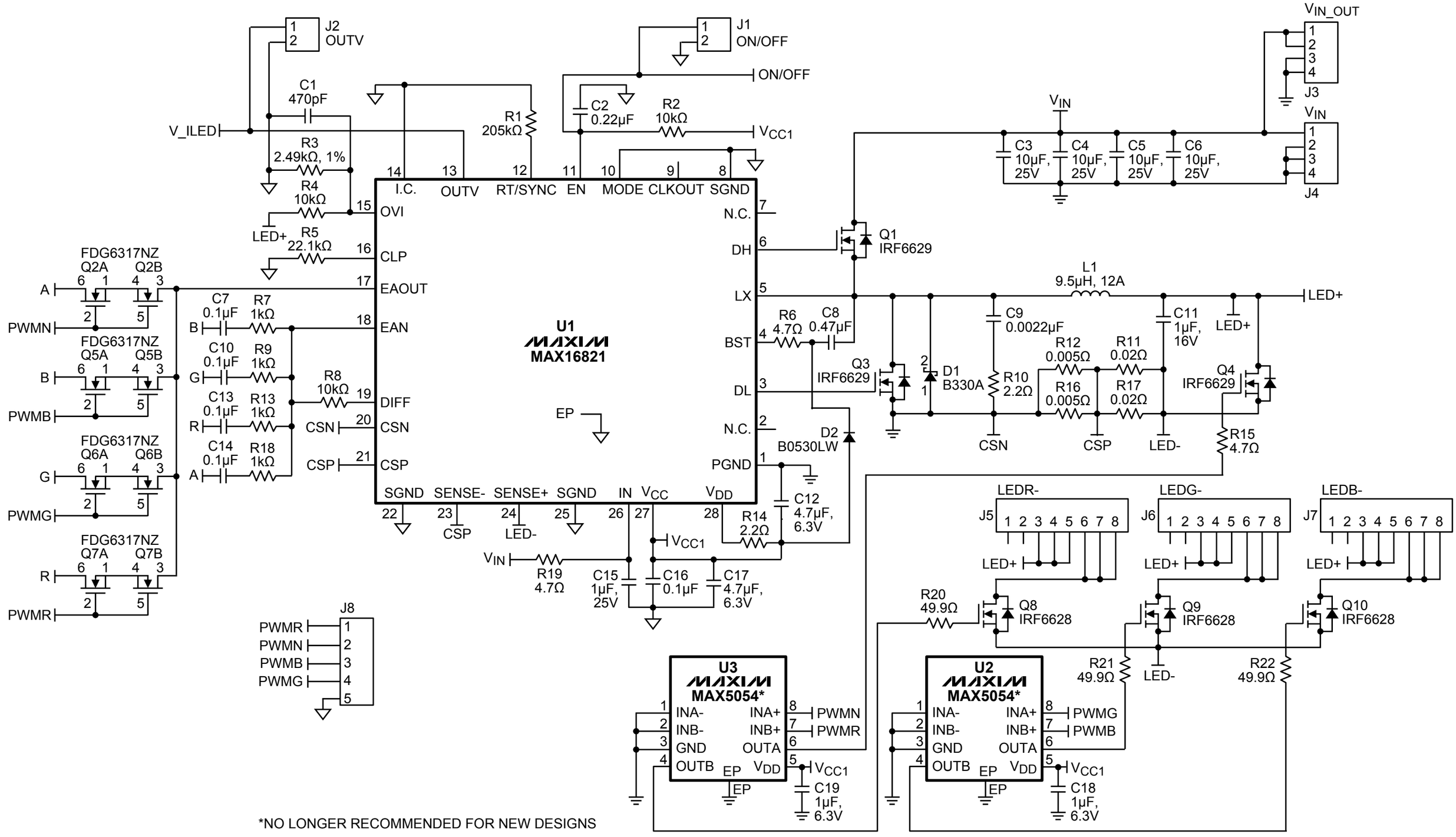

*NO LONGER RECOMMENDED FOR NEW DESIGNS