PMP7755

PMP7755 Schematic

Literature Number:SNVR009

Revision History	
Revision	Notes

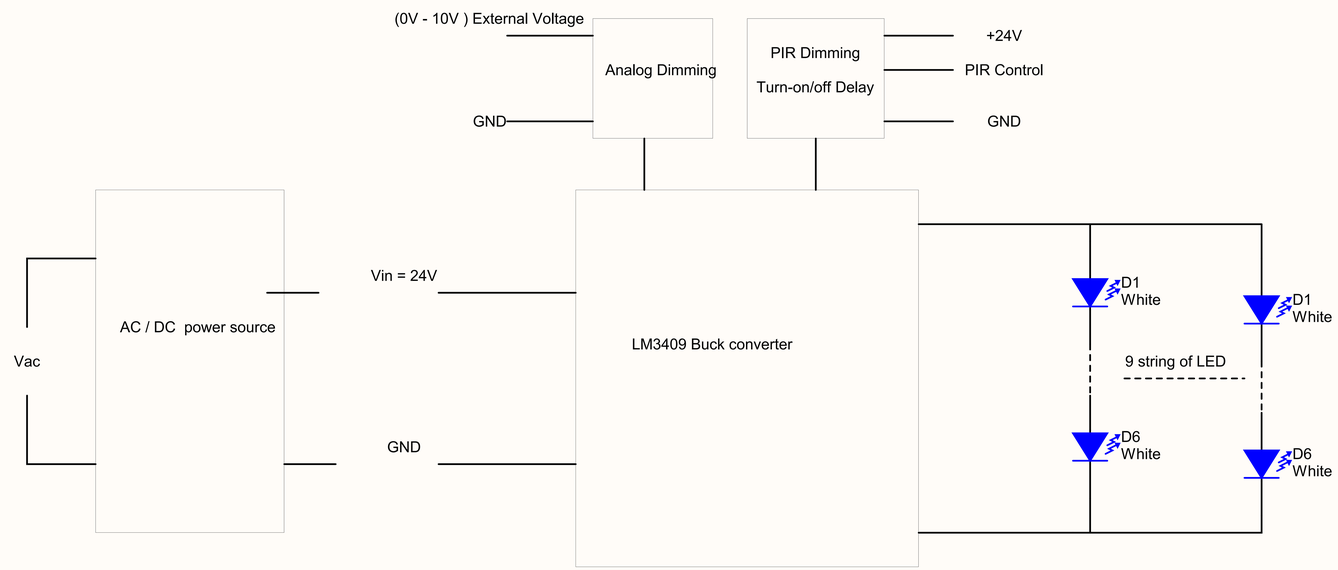

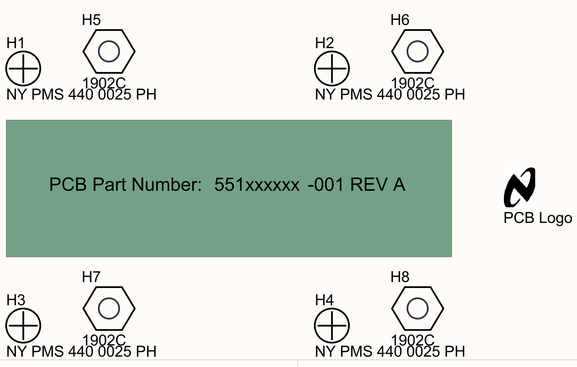

National Semiconductor and/or its licensors do not warrant the accuracy or completeness of this specification or any information contained therein. National and/or its licensors do not warrant that this design will meet the specifications, will be suitable for your application or fit for any particular purpose, or will operate in an implementation. National and/or its licensors do not warrant that the design is production worthy. You should completely validate and test your design implementation to confirm the system functionality for your application.

Designed for: Public Release		Mod. Date: 2/24/2010
Project: Garage Light LED Driver		
Sheet Title: Cover Sheet		Sheet: 1 of 4
Size: B	Schematic: 870xxxxxx	Rev: X1
Assembly Variant: NSC1042 w/ PIR Dimming		
File: NSC1042.SchDoc		
Contact: http://www.national.com/support		

National Semiconductor

http://www.national.com

© Copyright, National Semiconductor, 2009

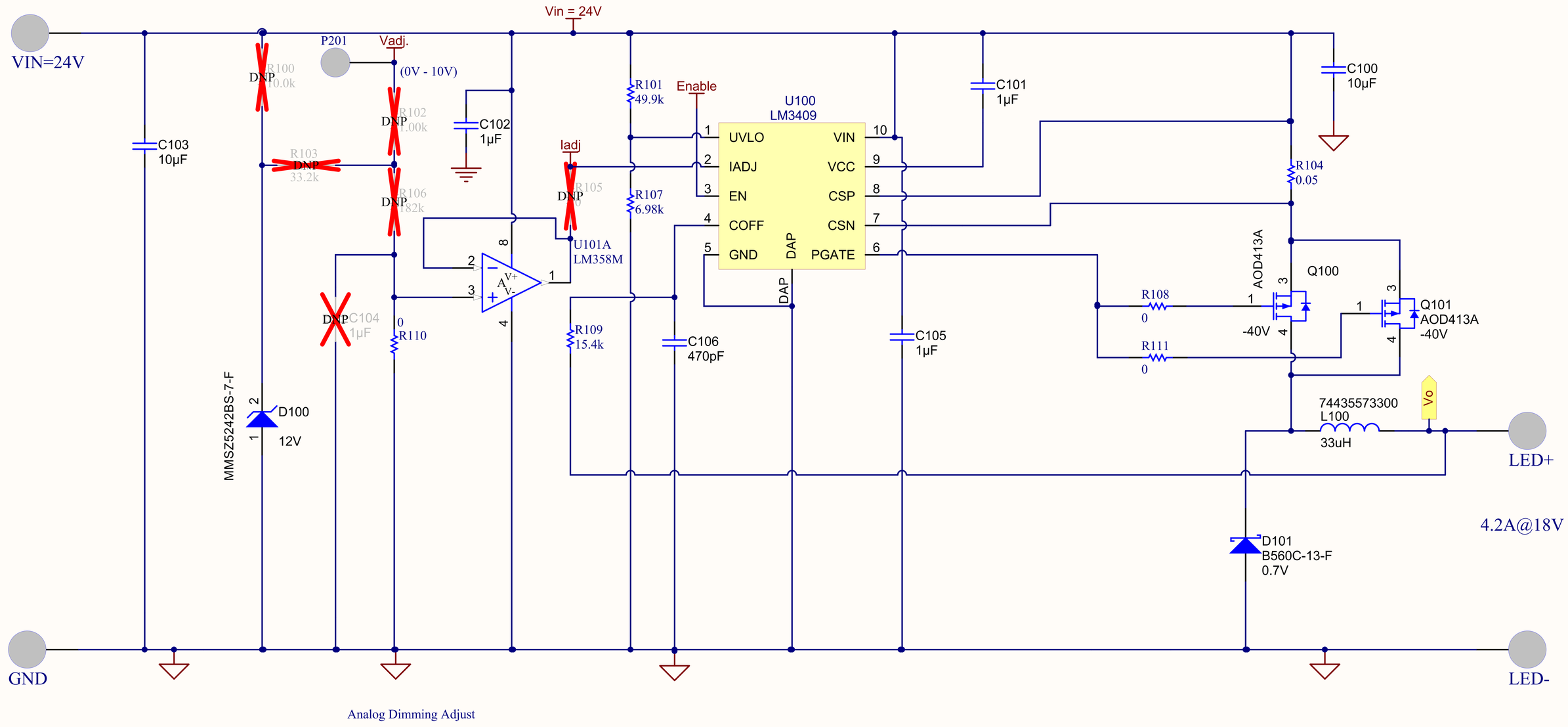

National Semiconductor and/or its licensors do not warrant the accuracy or completeness of this specification or any information contained therein. National and/or its licensors do not warrant that this design will meet the specifications, will be suitable for your application or fit for any particular purpose, or will operate in an implementation. National and/or its licensors do not warrant that the design is production worthy. You should completely validate and test your design implementation to confirm the system functionality for your application.

Designed for: Public Release		Mod. Date: 3/16/2010
Project: Garage Light LED Driver		
Sheet Title: LM3409 LED Driver		Sheet:2 of 4
Size: A4	Schematic: 870xxxxxx	Rev: X1
Assembly Variant:NSC1042 w/ PIR Dimming		
File: NSC1042_Sh2_rev2.SchDoc		PADC:
Contact: http://www.national.com/support		

National Semiconductor

http://www.national.com

© Copyright, National Semiconductor, 2009

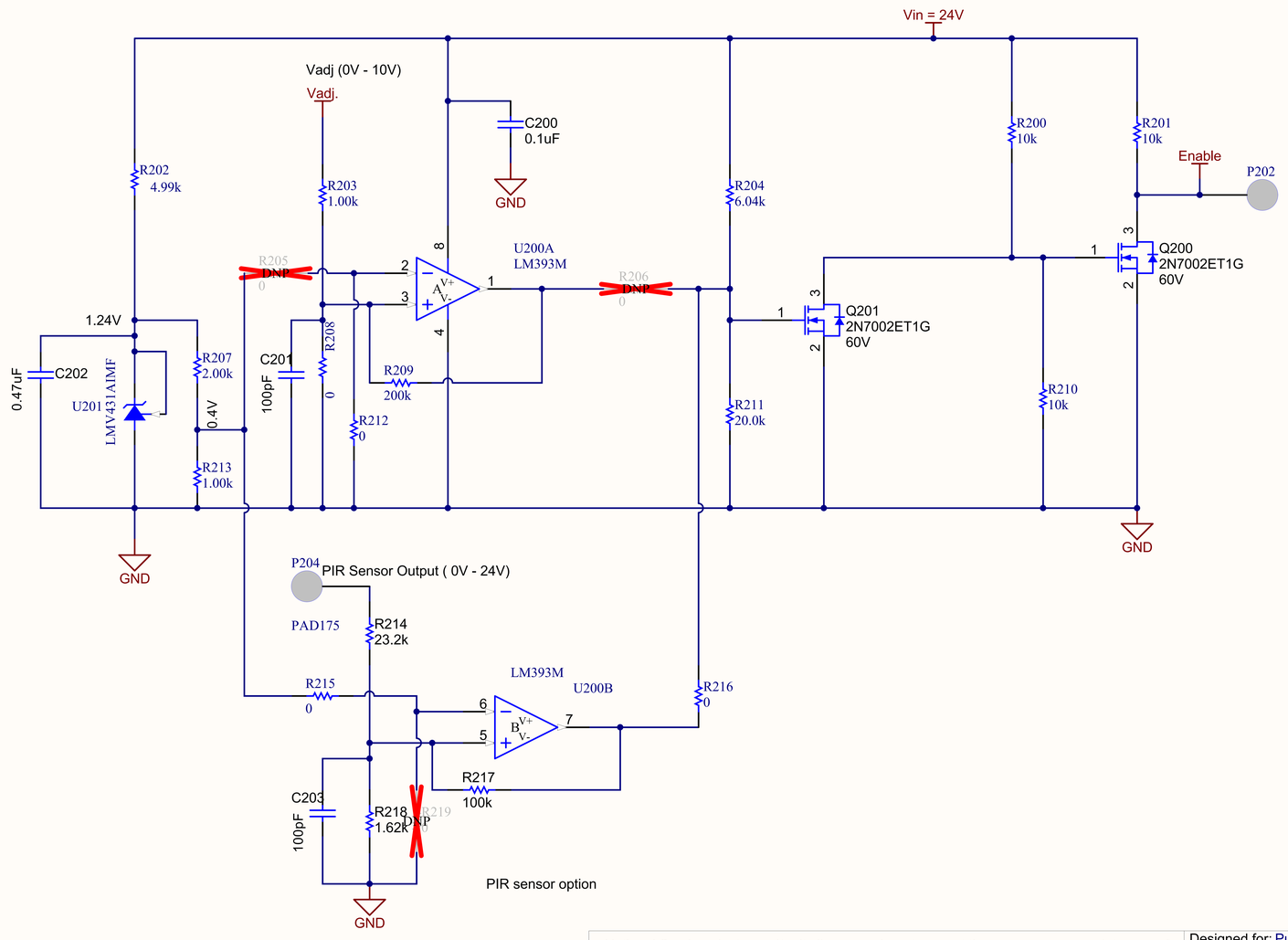

National Semiconductor and/or its licensors do not warrant the accuracy or completeness of this specification or any information contained therein. National and/or its licensors do not warrant that this design will meet the specifications, will be suitable for your application or fit for any particular purpose, or will operate in an implementation. National and/or its licensors do not warrant that the design is production worthy. You should completely validate and test your design implementation to confirm the system functionality for your application.

Designed for: Public Release		Mod. Date: 3/16/2010
Project: Garage Light LED Driver		
Sheet Title: Enable / Disable Circuit		Sheet:3 of 4
Size: B	Schematic: 870xxxxxx	Rev: X1
Assembly Variant: NSC1042 w/ PIR Dimming		
File: NSC1042_Sh3_rev2.SchDoc		
Contact: http://www.national.com/support		

National Semiconductor

http://www.national.com

© Copyright, National Semiconductor, 2009

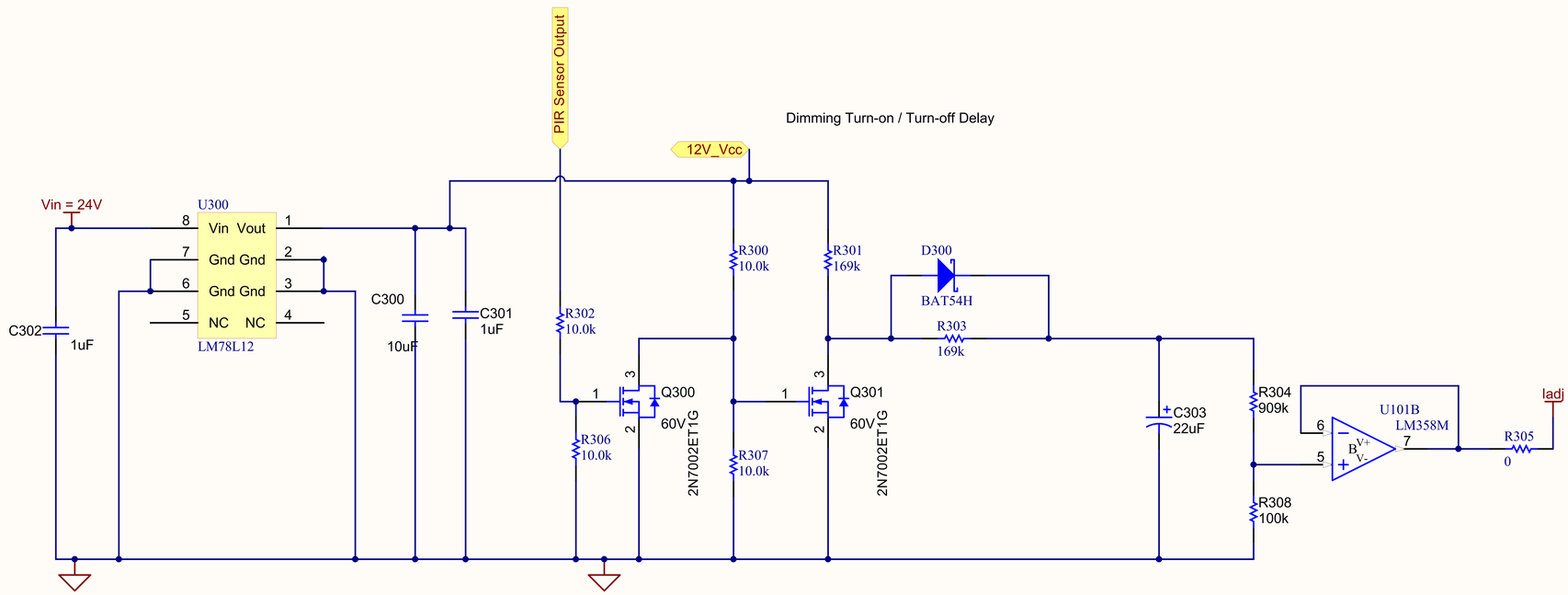

Dimming Turn-on / Turn-off Delay and PIR Dimming Adjust

National Semiconductor and/or its licensors do not warrant the accuracy or completeness of this specification or any information contained therein. National and/or its licensors do not warrant that this design will meet the specifications, will be suitable for your application or fit for any particular purpose, or will operate in an implementation. National and/or its licensors do not warrant that the design is production worthy. You should completely validate and test your design implementation to confirm the system functionality for your application.

Designed for: Public Release		Mod. Date: 3/16/2010
Project: Garage Light LED Driver		
Sheet Title: ON-Off Delay & PIR sensor		Sheet: 4 of 4
Size: B	Schematic: 870xxxxxx	Rev: X1
Assembly Variant: NSC1042 w/ PIR Dimming		
File: NSC1042_Sh4_rev2.SchDoc		
Contact: http://www.national.com/support		

National Semiconductor

http://www.national.com

© Copyright, National Semiconductor, 2009

IMPORTANT NOTICE

Texas Instruments Incorporated and its subsidiaries (TI) reserve the right to make corrections, modifications, enhancements, improvements, and other changes to its products and services at any time and to discontinue any product or service without notice. Customers should obtain the latest relevant information before placing orders and should verify that such information is current and complete. All products are sold subject to TI's terms and conditions of sale supplied at the time of order acknowledgment.

TI warrants performance of its hardware products to the specifications applicable at the time of sale in accordance with TI's standard warranty. Testing and other quality control techniques are used to the extent TI deems necessary to support this warranty. Except where mandated by government requirements, testing of all parameters of each product is not necessarily performed.

TI assumes no liability for applications assistance or customer product design. Customers are responsible for their products and applications using TI components. To minimize the risks associated with customer products and applications, customers should provide adequate design and operating safeguards.

TI does not warrant or represent that any license, either express or implied, is granted under any TI patent right, copyright, mask work right, or other TI intellectual property right relating to any combination, machine, or process in which TI products or services are used. Information published by TI regarding third-party products or services does not constitute a license from TI to use such products or services or a warranty or endorsement thereof. Use of such information may require a license from a third party under the patents or other intellectual property of the third party, or a license from TI under the patents or other intellectual property of TI.

Reproduction of TI information in TI data books or data sheets is permissible only if reproduction is without alteration and is accompanied by all associated warranties, conditions, limitations, and notices. Reproduction of this information with alteration is an unfair and deceptive business practice. TI is not responsible or liable for such altered documentation. Information of third parties may be subject to additional restrictions.

Resale of TI products or services with statements different from or beyond the parameters stated by TI for that product or service voids all express and any implied warranties for the associated TI product or service and is an unfair and deceptive business practice. TI is not responsible or liable for any such statements.

TI products are not authorized for use in safety-critical applications (such as life support) where a failure of the TI product would reasonably be expected to cause severe personal injury or death, unless officers of the parties have executed an agreement specifically governing such use. Buyers represent that they have all necessary expertise in the safety and regulatory ramifications of their applications, and acknowledge and agree that they are solely responsible for all legal, regulatory and safety-related requirements concerning their products and any use of TI products in such safety-critical applications, notwithstanding any applications-related information or support that may be provided by TI. Further, Buyers must fully indemnify TI and its representatives against any damages arising out of the use of TI products in such safety-critical applications.

TI products are neither designed nor intended for use in military/aerospace applications or environments unless the TI products are specifically designated by TI as military-grade or "enhanced plastic." Only products designated by TI as military-grade meet military specifications. Buyers acknowledge and agree that any such use of TI products which TI has not designated as military-grade is solely at the Buyer's risk, and that they are solely responsible for compliance with all legal and regulatory requirements in connection with such use.

TI products are neither designed nor intended for use in automotive applications or environments unless the specific TI products are designated by TI as compliant with ISO/TS 16949 requirements. Buyers acknowledge and agree that, if they use any non-designated products in automotive applications, TI will not be responsible for any failure to meet such requirements.

Following are URLs where you can obtain information on other Texas Instruments products and application solutions:

Products		**Applications**	
Audio	www.ti.com/audio	Automotive and Transportation	www.ti.com/automotive
Amplifiers	amplifier.ti.com	Communications and Telecom	www.ti.com/communications
Data Converters	dataconverter.ti.com	Computers and Peripherals	www.ti.com/computers
DLP® Products	www.dlp.com	Consumer Electronics	www.ti.com/consumer-apps
DSP	dsp.ti.com	Energy and Lighting	www.ti.com/energy
Clocks and Timers	www.ti.com/clocks	Industrial	www.ti.com/industrial
Interface	interface.ti.com	Medical	www.ti.com/medical
Logic	logic.ti.com	Security	www.ti.com/security
Power Mgmt	power.ti.com	Space, Avionics and Defense	www.ti.com/space-avionics-defense
Microcontrollers	microcontroller.ti.com	Video and Imaging	www.ti.com/video
RFID	www.ti-rfid.com		
OMAP Mobile Processors	www.ti.com/omap		
Wireless Connectivity	www.ti.com/wirelessconnectivity		

TI E2E Community Home Page e2e.ti.com

Mailing Address: Texas Instruments, Post Office Box 655303, Dallas, Texas 75265
Copyright © 2012, Texas Instruments Incorporated