System-Side Impedance Track™ Fuel (Gas) Gauge Reference Design

(PREVIEW) TIDA-00051

TIDesigns

Description & Features | Technical Documents | Support & Community

View the Important Notice for TI Designs covering authorized use, intellectual property matters and disclaimers.

Description

This reference design is a complete solution that includes one bq27425-G2B circuit module with an integrated current-sense resistor. A separated orderable EV2300 or EV2400 PC interface board for gas gauge interface along with a PC USB cable, and Windows™-based PC software is needed when using this design. The circuit module includes one bq27425-G2B integrated circuit and all other onboard components necessary to monitor and predict capacity for a system-side fuel gauge solution. The reference design connects directly across the battery pack. With the EV2300 or EV2400 interface board and software, the user can:

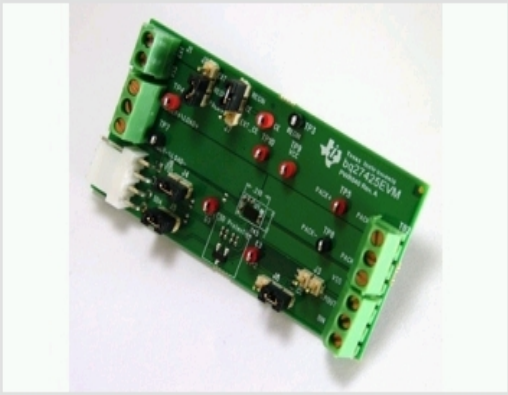

System-Side Impedance Track™ Fuel (Gas) Gauge Reference Design

Features

- # Series Cells: 1S
- Max Input Volts: 4.5V
- Max Charge Current: 2A
- Communication: I2C
- Integrated sense resistor
- This EVM requires the use of a communications tranciever, the EV2400.

Schematic/Block Diagram

Quickly understand overall system functionality.

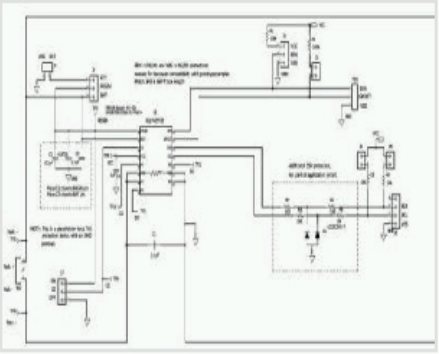

Download Schematic

Test Data

Get results faster with test and simulation data that's been verified.

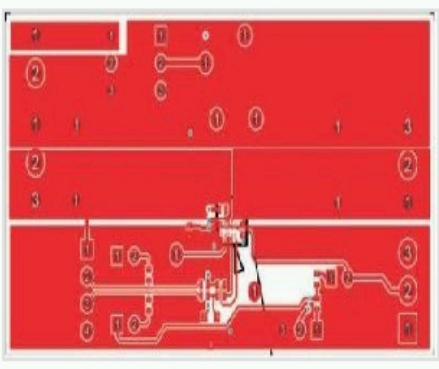

Download Test Data

Order Now

Part Number	Status
TIDA-00051: System-Side Impedance Track™ Fuel (Gas) Gauge Reference Design	PREVIEW

TI Devices (1)

Get more information on the TI products in this reference design.

Part Number	Name	Product Family
BQ27425-G1	System-Side Impedance Track™ Fuel Gauge With Direct Battery Connection | Gas Gauge Battery	Battery Management Products

Bill of Materials

Find the complete list of components in this reference design.

Download BOM

CAD/CAE Symbols

Part #	Package | Pins	CAD File (.bxl)	STEP Model (.stp)
BQ27425-G1	DSBGA (YZF) | 15	Download	-

Texas Instruments and Accelerated Designs Inc. have collaborated together to provide TI customers with schematic symbols and PCB layout footprints for TI products.

Step 1: Download and install the Ultra Librarian software ZIP: 62MB

Step 2: Download the Symbol and Footprint .bxl file.

- read more -

Technical Documents

User Guides (2)

Title	Abstract	Type	Size (KB)	Date	Views
TIDA-00051 PCB		PDF	273	27 Aug 2013	56
TIDA-00051 Test Results		PDF	701	27 Aug 2013	48

More Literature (2)

Title	Abstract	Type	Size (KB)	Date	Views
TIDA-00051 BOM		PDF	42	27 Aug 2013	45
TIDA-00051 Schematic		PDF	42	27 Aug 2013	54

Applications

- Handset: Smartphone
- Tablet: Enterprise
- Tablet: Multimedia

Support & Community

TI E2E™ Community

TI E2E™ Community

As a member of my.TI you can join the TI E2E™ Community where you can ask questions, share ideas and collaborate with fellow engineers and TI experts

Contents are provided "AS IS" by the respective TI and Community contributors and do not constitute TI specifications. See Terms of Use.

Engage in the Community

- Amplifiers
- Broadband RF/IF & Digital Radio
- Clocks & Timers
- Data Converters
- DLP® & MEMS
- Interface
- Logic
- Power Management
- Wireless Connectivity

Wikis

Visit the TI Wiki

Other Support

- TI E2E Community
- Contact Technical Support

TI is a global semiconductor design and manufacturing company. Innovate with 100,000+ analog ICs and embedded processors, along with software, tools and the industry's largest sales/support staff.

© Copyright 1995-2013 Texas Instruments Incorporated. All rights reserved.
Trademarks | Privacy Policy | Terms of Use