Tiny, Highly Integrated PMIC Reference Design for Solid-State Drives

(ACTIVE) TIDA-TRIPLE-OUTPUT-BUCK-LDO-PMIC-REFERENCE-DESIGN

Description & Features | Technical Documents | Support & Community | Order Now

View the Important Notice for TI Designs covering authorized use, intellectual property matters and disclaimers.

Fully assembled board (shown above) developed for testing and performance validation only, not available for sale.

Description

Compact power solution for consumer and enterprise solid-state drives (SSD) enables flexible design and enhances data integrity. The advanced Power Management Unit (PMU) contains three configurable, high efficiency buck regulators for supplying variable voltages. This reliable, flexible power solution replaces up to four (4) discrete components typically used in these drives.

Features

- Buck 1: 1.1V to 3.6V; 1.6A
- Buck 2: 1.1V to 3.6V; 1A
- Buck 3: 0.7V to 1.335V; 1A
- Programmable low-dropout LDO 1.2V to 3.1V, up to 250 mA
- Up to 95% efficient buck regulator with PFM mode for high-efficiency light-load operation and deep sleep mode (DEVSLP) to save power during idle times
- This fully-functional evaluation board is supported with design files and an application note

Schematic/Block Diagram

Quickly understand overall system functionality.

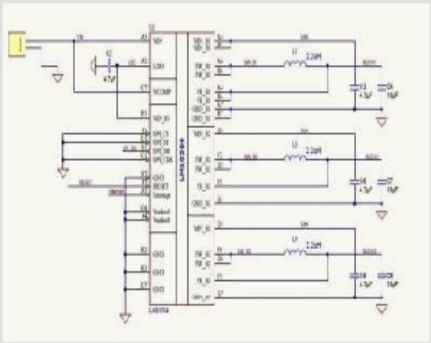

Download Schematic

Bill of Materials (BOM)

Find the complete list of components in this reference design.

Download BOM

TI Devices (1)

Order samples, get tools and find more information on the TI products in this reference design.

Part Number	Name	Product Family	Sample & Buy	Design Kits & Evaluation Modules
LM10504	Triple Buck + LDO Power Management Unit	Power Management	Sample & Buy	View Design Kits & Evaluation Modules

CAD/CAE symbols

Part #	Package | Pins	CAD File (.bxl)	STEP Model (.stp)
LM10504	DSBGA (YFR) | 34	Download	-

Texas Instruments and Accelerated Designs Inc. have collaborated together to provide TI customers with schematic symbols and PCB layout footprints for TI products.

Step 1: Download and install the Ultra Librarian software ZIP: 62MB

Step 2: Download the Symbol and Footprint .bxl file.

- read more -

Technical Documents

Design Files (4)

Title	Abstract	Type	Size (KB)	Date	Views
Triple Output Buck LDO PMIC Reference Design Altium Files		ZIP	303	24 Jun 2013	17
Triple Output Buck LDO PMIC Reference Design Gerber		ZIP	130	24 Jun 2013	13
BOM for Triple Output Buck LDO PMIC Reference Design		ZIP	13	24 Jun 2013	25
Schematic for Triple Output Buck LDO PMIC Reference Design		ZIP	119	24 Jun 2013	68

Support & Community

TI E2E™ community

TI E2E™ Community

As a member of my.TI you can join the TI E2E™ Community where you can ask questions, share ideas and collaborate with fellow engineers and TI experts

Contents are provided "AS IS" by the respective TI and Community contributors and do not constitute TI specifications. See Terms of use.

Engage in the Community

- Amplifiers
- Broadband RF/IF & Digital Radio
- Clocks & Timers
- Data Converters
- DLP® & MEMS
- Interface
- Logic
- Power Management
- Wireless Connectivity

Wikis

Visit the TI Wiki

Other Support

- TI E2E Community
- Contact Technical Support

Your History

Products You Recently Viewed

- CARDVRRDK
- PMP7220.8
- TIDM-SOLAR-ONEPHINV
- TIDA-00079
- TIDM-BANKCARDREADER

TI is a global semiconductor design and manufacturing company. Innovate with 100,000+ analog ICs and embedded processors, along with software, tools and the industry's largest sales/support staff.

© Copyright 1995-2014 Texas Instruments Incorporated. All rights reserved.
Trademarks | Privacy policy | Terms of use | Terms of sale