Complete Gate Drive and Bias Power Solution for Solar MicroInverter's DC/DC and DC/AC Blocks

TIDesigns

(ACTIVE) PMP9461.5

Description & Features | Technical Documents | Support & Community | Order Now

View the Important Notice for TI Designs covering authorized use, intellectual property matters and disclaimers.

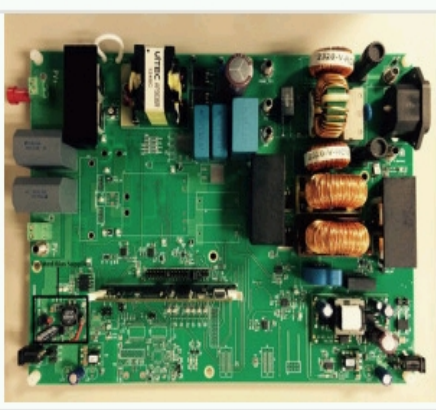

Complete Gate Drive and Bias Power Solution for Solar MicroInverter's DC/DC and DC/AC Blocks

Description

PMP9461 is a reference design with complete power and gate drive requirements for grid tie solar microinverters. The major goal of the reference design is to acheive significant integration and perfomance enhancement in gate drive as well as the bias supply segment of microInverters. The solution features SM72295 (full bridge gate driver with integrated current sense), SM74101 (7A Sink/3A source single driver), SM72482 (5A dual low side driver), LM5017 (as primary and secondary bias supply provider), and again the LM5017 for powering up the drivers in DC/AC section of inverters. All bias supplies are generated using cost effective and highly efficent Fly-Buck™ topology.

Features

- Full bridge configuration of driver reduces component count
- 100V integrated diodes in driver allow higher input voltage rail and transients
- High integration with internal current sensing with no external current amplifier needed.
- Dual half-bridge 100V, 3A MOSFET drivers
- Simple, low BOM count, and low cost design for bias supply
- Removes the need of external adapters for isolated bias power

Fully assembled board (shown above) developed for testing and performance validation only, not available for sale.

Schematic/Block Diagram

Quickly understand overall system functionality.

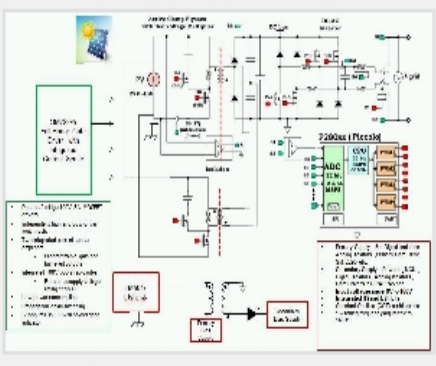

Download Schematic

Test Data

Get results faster with test and simulation data that's been verified.

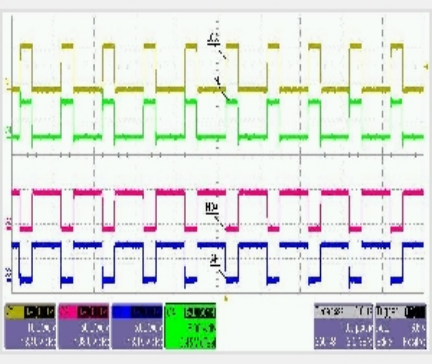

Download Test Data

Design Files

Download ready-to-use system files to speed your design process. Get Viewer.

Download Design Files

Bill of Materials (BOM)

Find the complete list of components in this reference design.

Download BOM

Parametrics

	PMP9461.5
Vin (Max) (V)	40
Vin (Min) (V)	20
Vout (Nom) (V)	14
Iout (Max) (A)	.1
Output Power	1.4
Isolated/Non-Isolated	Isolated
Input Type	DC
Topology	Flybuck

TI Devices (4)

Order samples, get tools and find more information on the TI products in this reference design.

Part Number	Name	Product Family	Sample & Buy	Design Kits & Evaluation Modules
LM5017	7.5-100V Wide Vin, 600mA Constant On-Time Synchronous Buck Regulator	Converter (Integrated Switch)	Sample & Buy	View Design Kits & Evaluation Modules
SM72295	Photovoltaic Full Bridge Driver	AC/DC and Isolated DC/DC Power	Sample & Buy	Not Available

Show More

CAD/CAE symbols

Part #	Package | Pins	CAD File (.bxl)	STEP Model (.stp)
LM5017	HSOP (DDA) | 8	Download	Download
	WSON (NGU) | 8	Download	Download
SM72295	SOIC (DW) | 28	Download	Download
SM72482	SOIC (D) | 8	Download	Download

Texas Instruments and Accelerated Designs Inc. have collaborated together to provide TI customers with schematic symbols and PCB layout footprints for TI products.

Step 1: Download and install the Ultra Librarian software ZIP: 62MB

Step 2: Download the Symbol and Footprint .bxl file.

- read more -

Technical Documents

User Guides (2)

Title	Abstract	Type	Size (KB)	Date	Views
Digitally Controlled Solar Micro Inverter Using C2000 Piccolo Microcontroller		PDF	2042	16 Oct 2014	69
PMP9461 Test Results		PDF	6712	16 Oct 2014	33

Design Files (3)

Title	Abstract	Type	Size (KB)	Date	Views
PMP9461 Gerber		ZIP	746	16 Oct 2014	14
PMP9461 BOM		PDF	44	16 Oct 2014	13
PMP9461 Schematic		PDF	507	16 Oct 2014	59

Related Tools & Software

Software (1)

controlSUITE .zip Package v3.2.8
(ZIP, 997724 KB) 12266 views, 26 Aug 2014

Support & Community

TI E2E™ community

TI E2E™ Community

As a member of my.TI you can join the TI E2E™ Community where you can ask questions, share ideas and collaborate with fellow engineers and TI experts

Contents are provided "AS IS" by the respective TI and Community contributors and do not constitute TI specifications. See Terms of use.

Engage in the Community

- Amplifiers
- Broadband RF/IF & Digital Radio
- Clocks & Timers
- Data Converters
- DLP® & MEMS
- Interface
- Logic
- Power Management
- Wireless Connectivity

Wikis

Visit the TI Wiki

Other Support

- TI E2E Community
- Contact Technical Support

Your History

Products You Recently Viewed

- TIDM-TIA
- PMP1182.1
- PMP9460.2
- TIDC-BLUETOOTH-LOW-ENERGY-LIGHT
- TPS61106REF-198

TI is a global semiconductor design and manufacturing company. Innovate with 100,000+ analog ICs and embedded processors, along with software, tools and the industry's largest sales/support staff.

© Copyright 1995-2014 Texas Instruments Incorporated. All rights reserved.
Trademarks | Privacy policy | Terms of use | Terms of sale