NFC Configuration & Logging Interface (Dual Port FRAM: NFC <-> FRAM <-> Serial) Reference Design

(ACTIVE) TIDA-00230

Description & Features | Technical Documents | Support & Community | Order Now

View the Important Notice for TI Designs covering authorized use, intellectual property matters and disclaimers.

Key Document

- NFC Configuration and Logging Interface (TIDA-00230) (PDF 10574 KB)
  13 Oct 2014 82 views
- View All Technical Documents (7)

Fully assembled board (shown above) developed for testing and performance validation only, not available for sale.

Description

The overall scope of this reference design is to provide a contactless service interface. Service interfaces allow reading logs from the system and configuring system (calibration data, firmware upgrades, etc.) in factory applications such as Human Machine Interface (HMI). FRAM content on a TI MSP430 available over NFC and serial port (I2C, SPI) simultaneously, enables log messages to be read, by a temperature or pressure transmitter as an example, even when the system is without power. Configuration parameters can also be programmed at commissioning before (or after) the system is installed and powered. With such a function the system does not need to be powered to be configured or to read their logs, this brings significant cost savings at commissioning or in quality returns.

Features

- ISO14443B interface (RF430CL330): Android NFC standard
- 64kB FRAM (MSP430FR5969)
- Up to 8Mb/s throughput to/from FRAM over serial
- 800kb/s throughput to/from FRAM over NFC
- Powered over NFC
- Power ORing is provided between the main system and the NFC daughter card to demonstrate that the NFC card can be woken up when the main system is down.

Schematic/Block Diagram

Quickly understand overall system functionality.

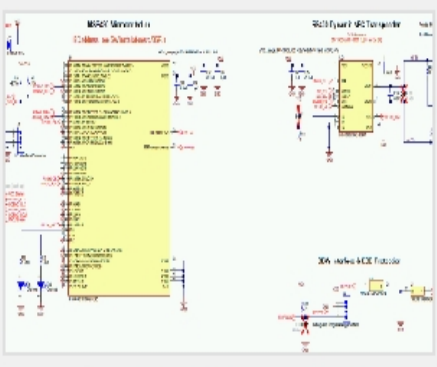

Download Schematic

Test Data

Get results faster with test and simulation data that's been verified.

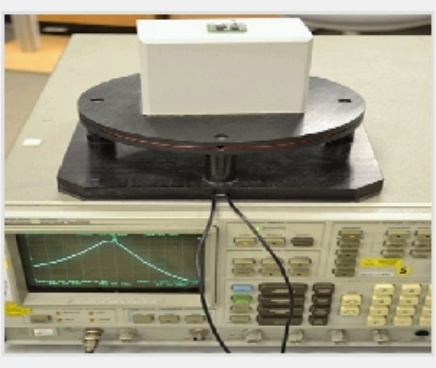

Download Test Data

Design Files

Download ready-to-use system files to speed your design process. Get Viewer.

Download Design Files

Bill of Materials (BOM)

Find the complete list of components in this reference design.

Download BOM

TI Devices (3)

Order samples, get tools and find more information on the TI products in this reference design.

Part Number	Name	Product Family	Sample & Buy	Design Kits & Evaluation Modules
MSP430FR5969	MSP430FR5969 16 MHz Ultra-Low-Power Microcontroller featuring 64 KB FRAM, 2 KB SRAM, 40 IO	Ultra-low Power	Sample & Buy	View Design Kits & Evaluation Modules
RF430CL330H	Dynamic NFC Interface Transponder	NFC / RFID	Sample & Buy	View Design Kits & Evaluation Modules
TPD1E10B06	Single Channel ESD in 0402 package with 10pF Capacitance and 6V Breakdown	ESD Protection Diodes	Sample & Buy	View Design Kits & Evaluation Modules

CAD/CAE symbols

Part #	Package | Pins	CAD File (.bxl)	STEP Model (.stp)
MSP430FR5969	VQFN (RGZ) | 48	Download	-
RF430CL330H	TSSOP (PW) | 14	Download	Download
TPD1E10B06	X1SON (DPY) | 2	Download	-

Texas Instruments and Accelerated Designs Inc. have collaborated together to provide TI customers with schematic symbols and PCB layout footprints for TI products.

Step 1: Download and install the Ultra Librarian software ZIP: 62MB

Step 2: Download the Symbol and Footprint .bxl file.

- read more -

Technical Documents

User Guides (1)

Title	Abstract	Type	Size (KB)	Date	Views	TI Recommends
NFC Configuration and Logging Interface (TIDA-00230)		PDF	10574	13 Oct 2014	82	✓

Design Files (6)

Title	Abstract	Type	Size (KB)	Date	Views
TIDA-00230 PCB		PDF	630	16 Oct 2014	20
TIDA-00230 Assembly Drawing		PDF	135	16 Oct 2014	7
TIDA-00230 Gerber		ZIP	250	31 Jul 2014	12
TIDA-00230 CAD Files		ZIP	580	31 Jul 2014	21
TIDA-00230 BOM		PDF	78	31 Jul 2014	22
TIDA-00230 Schematic and Block Diagram		PDF	445	31 Jul 2014	69

Related Tools & Software

Software (1)

TIDA-00230 Firmware (MSP430FR5969)
(ZIP, 65 KB) 5 views, 31 Jul 2014

Applications

- HMI (Human Machine Interface)
- Thermostat

Support & Community

TI E2E™ community

TI E2E™ Community

As a member of my.TI you can join the TI E2E™ Community where you can ask questions, share ideas and collaborate with fellow engineers and TI experts

Contents are provided "AS IS" by the respective TI and Community contributors and do not constitute TI specifications. See Terms of use.

Engage in the Community

- Amplifiers
- Broadband RF/IF & Digital Radio
- Clocks & Timers
- Data Converters
- DLP® & MEMS
- Interface
- Logic
- Power Management
- Wireless Connectivity

Wikis

Visit the TI Wiki

Other Support

- TI E2E Community
- Contact Technical Support

Your History

Products You Recently Viewed

- TIDA-00167
- TIDA-00018
- TIDA-00207
- TIDM-BPM
- TIDA-00080

TI is a global semiconductor design and manufacturing company. Innovate with 100,000+ analog ICs and embedded processors, along with software, tools and the industry's largest sales/support staff.

© Copyright 1995-2014 Texas Instruments Incorporated. All rights reserved.
Trademarks | Privacy policy | Terms of use | Terms of sale