300W Full Bridge Phase Shifted (FBPS) DC/DC Power Supply Reference Design

TIDesigns

(ACTIVE) PMP8606

Description & Features | Technical Documents | Support & Community | Order Now

View the Important Notice for TI Designs covering authorized use, intellectual property matters and disclaimers.

Description

This design is a 100kHz FBPS converter working in voltage mode. It supports 400Vdc..750Vdc input voltage range and provides 24V/12A regulated. TI's UCC28950 part enables high efficiency at high input voltage.

Features

- Over 92% efficiency at full load
- High input voltage
- 250W phase shifted fullbridge
- Wide high input voltage range 400Vdc to 750Vdc
- Provides synchronous rectification w/ efficient voltage doubler

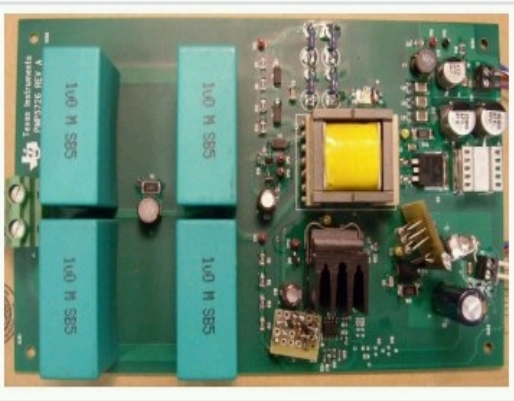

300W Full bridge phase shifted (FBPS) DC/DC power supply reference design (top view)

Fully assembled board (shown above) developed for testing and performance validation only, not available for sale.

Schematic/Block Diagram

Quickly understand overall system functionality.

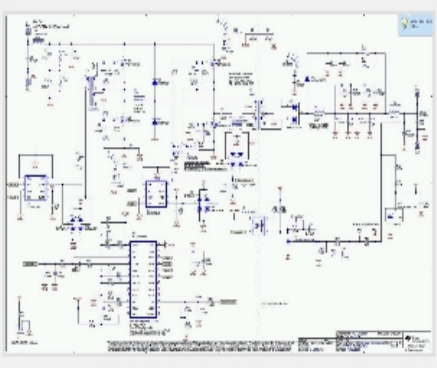

Download Schematic

Test Data

Get results faster with test and simulation data that's been verified.

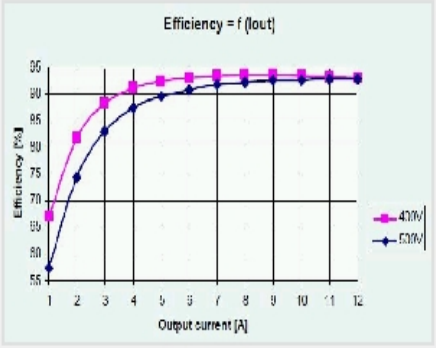

Download Test Data

Bill of Materials (BOM)

Find the complete list of components in this reference design.

Download BOM

Parametrics

	PMP8606
Vin (Max) (V)	750
Vin (Min) (V)	350
Vout (Nom) (V)	24
Iout (Max) (A)	12
Output Power	288
Isolated/Non-Isolated	Isolated
Input Type	DC
Topology	Full Bridge- Phase Shifted

TI Devices (3)

Order samples, get tools and find more information on the TI products in this reference design.

Part Number	Name	Product Family	Sample & Buy	Design Kits & Evaluation Modules
LMV431	Low-Voltage (1.24V) Adjustable Precision Shunt Regulators	Voltage Reference	Sample & Buy	View Design Kits & Evaluation Modules
UCC27324	Dual 4 A Peak High Speed Low-Side Power MOSFET Drivers	AC/DC and Isolated DC/DC Power Supply	Sample & Buy	View Design Kits & Evaluation Modules
UCC28950	Green Phase-Shifted Full-Bridge Controller with Synchronous Rectification	AC/DC and Isolated DC/DC Power Supply	Sample & Buy	View Design Kits & Evaluation Modules

CAD/CAE symbols

Part #	Package | Pins	CAD File (.bxl)	STEP Model (.stp)
LMV431	TO-92 (LP) | 3	Download	Download
	SOT (DBV) | 5	Download	Download
UCC27324	SOIC (D) | 8	Download	Download
	HVSSOP (DGN) | 8	Download	Download
	WSON (DSD) | 8	Download	-
	PDIP (P) | 8	Download	Download
UCC28950	TSSOP (PW) | 24	Download	Download

Texas Instruments and Accelerated Designs Inc. have collaborated together to provide TI customers with schematic symbols and PCB layout footprints for TI products.

Step 1: Download and install the Ultra Librarian software ZIP: 62MB

Step 2: Download the Symbol and Footprint .bxl file.

- read more -

Technical Documents

User Guides (1)

Title	Abstract	Type	Size (KB)	Date	Views
PMP8606 Test Results		PDF	257	24 Oct 2014	7

Design Files (2)

Title	Abstract	Type	Size (KB)	Date	Views
PMP8606 BOM		PDF	27	24 Oct 2014	4
PMP8606 Schematic		PDF	141	24 Oct 2014	22

Applications

- X-ray: Medical/Dental

Support & Community

TI E2E™ community

TI E2E™ Community

As a member of my.TI you can join the TI E2E™ Community where you can ask questions, share ideas and collaborate with fellow engineers and TI experts

Contents are provided "AS IS" by the respective TI and Community contributors and do not constitute TI specifications. See Terms of use.

Engage in the Community

- Amplifiers
- Broadband RF/IF & Digital Radio
- Clocks & Timers
- Data Converters
- DLP® & MEMS
- Interface
- Logic
- Power Management
- Wireless Connectivity

Wikis

Visit the TI Wiki

Other Support

- TI E2E Community
- Contact Technical Support

Your History

Products You Recently Viewed

- TIDA-00120
- PMP9460.3
- TIDA-00236
- TIDM-SMARTMETERBOARD3
- PMP9487

TI is a global semiconductor design and manufacturing company. Innovate with 100,000+ analog ICs and embedded processors, along with software, tools and the industry's largest sales/support staff.

© Copyright 1995-2014 Texas Instruments Incorporated. All rights reserved.
Trademarks | Privacy policy | Terms of use | Terms of sale