XGA digital video SerDes 18bit to 24bit Upscaler Solution for Automotive TFT LCD Displays

TIDesigns

(ACTIVE) TIDA-00140 No reviews yet. Add your review and give us feedback

Description & Features | Technical Documents | Support & Community | Order Now

View the Important Notice for TI Designs covering authorized use, intellectual property matters and disclaimers.

TIDA-00140 Reference Design Setup

Description

The TIDA-00140 reference design is a high speed serial video interface to connect a remote automotive XGA TFT LCD display with 24 bit Parallel RGB Interface to a video processing system. Image enhancement features - dithering and white balance - optimize display performance. It uses TIs FPD-Link II SerDes technology to transmit uncompressed video data over shielded twisted pair cable. This design incorporates the SERDESUR-916ROS/NOPB board to create the solution.

Features

- Support XGA x 60 Display data rates
- Hardware dithering offers 24-bit image quality on 18-bit displays
- White balance adjustment (LUT)
- Adaptive Equalizer Auto Calibrates for cable length, aging, and over temperature
- Built In Self Test (BIST) ASIL B Applications

View available purchase options for designs kits, evaluation modules and/or the bill of materials.

$149.00(USD)

Order Now

Schematic/Block Diagram

Quickly understand overall system functionality.

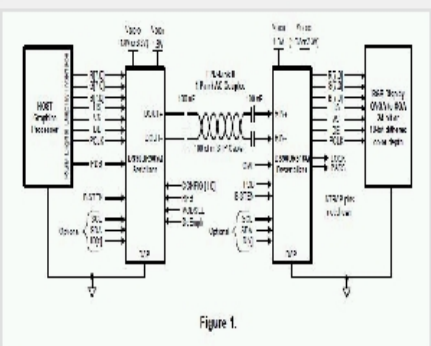

Download Schematic

Test Data

Get results faster with test and simulation data that's been verified.

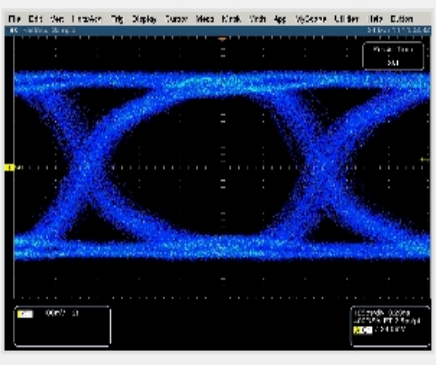

Download Test Data

Design Files

Download ready-to-use system files to speed your design process. Get Viewer.

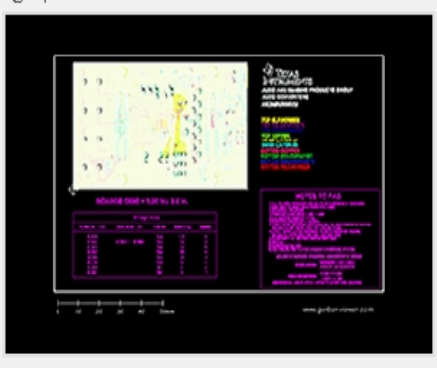

Download Design Files

Bill of Materials (BOM)

Find the complete list of components in this reference design.

Download BOM

Order Now

Part Number	Buy from Texas Instruments or Third Party	Status
SERDESUR-916ROS/NOPB: DS90UR916Q Evaluation Module	$149.00(USD) In Stock Typically Ships in 1 to 3 Business Days Buy from TI	ACTIVE

TI Devices (2)

Order samples, get tools and find more information on the TI products in this reference design.

Part Number	Name	Product Family	Sample & Buy	Design Kits & Evaluation Modules
DS90UR905Q-Q1	5-65MHz 24-bit Color FPD-Link II Serializer	Display & Imaging SerDes	Sample & Buy	View Design Kits & Evaluation Modules
DS90UR916Q-Q1	5-65 MHz 24-bit Color FPD-Link II Deserializer with Image Enhancement	Display & Imaging SerDes	Sample & Buy	View Design Kits & Evaluation Modules

CAD/CAE symbols

Part #	Package | Pins	CAD File (.bxl)	STEP Model (.stp)
DS90UR905Q-Q1	WQFN (RHS) | 48	Download	Download

Texas Instruments and Accelerated Designs Inc. have collaborated together to provide TI customers with schematic symbols and PCB layout footprints for TI products.

Step 1: Download and install the Ultra Librarian software ZIP: 62MB

Step 2: Download the Symbol and Footprint .bxl file.

- read more -

Technical Documents

User Guides (3)

Title	Abstract	Type	Size (KB)	Date	Views
TIDA-00140 Overview		PDF	246	28 Apr 2014	55
TIDA-00140 Test Results		PDF	237	28 Apr 2014	31
SERDESUR-916ROS User's Guide		PDF	3189	21 Sep 2012	55

Design Files (3)

Title	Abstract	Type	Size (KB)	Date	Views
TIDA-00140 BOM		PDF	45	28 Apr 2014	35
TIDA-00140 Block Diagram		PDF	61	28 Apr 2014	23
TIDA-00140 Schematic		PDF	1585	28 Apr 2014	23

Related Tools & Software

Software (1)

TIDA-00140 Design File
(ZIP, 2891 KB) 23 views, 28 Apr 2014

Support & Community

TI E2E™ community

TI E2E™ Community

As a member of my.TI you can join the TI E2E™ Community where you can ask questions, share ideas and collaborate with fellow engineers and TI experts

Contents are provided "AS IS" by the respective TI and Community contributors and do not constitute TI specifications. See Terms of use.

Engage in the Community

- Amplifiers
- Broadband RF/IF & Digital Radio
- Clocks & Timers
- Data Converters
- DLP® & MEMS
- Interface
- Logic
- Power Management
- Wireless Connectivity

Wikis

Visit the TI Wiki

Other Support

- TI E2E Community
- Contact Technical Support

Customer Reviews BETA

No reviews yet. Add your review and give us feedback

Your History

Products You Recently Viewed

- TIPD145
- PMP9365.5
- PMP9365.7
- PMP10397
- TIDM-LOWEND-IHD

TI is a global semiconductor design and manufacturing company. Innovate with 100,000+ analog ICs and embedded processors, along with software, tools and the industry's largest sales/support staff.

© Copyright 1995-2014 Texas Instruments Incorporated. All rights reserved.
Trademarks | Privacy policy | Terms of use | Terms of sale