Bluetooth Low Energy (Bluetooth Smart) to RS-485 Gateway

TIDesigns

(ACTIVE) TIDC-BLUETOOTH-SMART-TO-RS-485-GATEWAY

Description & Features | Technical Documents | Support & Community | Order Now

View the Important Notice for TI Designs covering authorized use, intellectual property matters and disclaimers.

Description

Modbus is an application protocol for serial data transmission that often uses RS-485 for serial data transfer. This reference design implements a gateway between Modbus and the Bluetooth® Smart CC2540 wireless MCU. It serves as a replacement for wires in an RS-485 network, and it allows another Bluetooth® Smart-compatible device like a computer or smartphone to easily connect to an existing RS-485 network.

Features

- Implements wireless connection to industrial electronic devices with the CC2540T Bluetooth Smart Gateway solution graded up to 125°C
- Simple and "ready to go" design shortens time to market
- Android app (ModbusController) provided to enable control and communication with Modbus peripheral poftware
- This design is tested and includes firmware, GUI, demo and user guide

Fully assembled board (shown above) developed for testing and performance validation only, not available for sale.

Schematic/Block Diagram

Quickly understand overall system functionality.

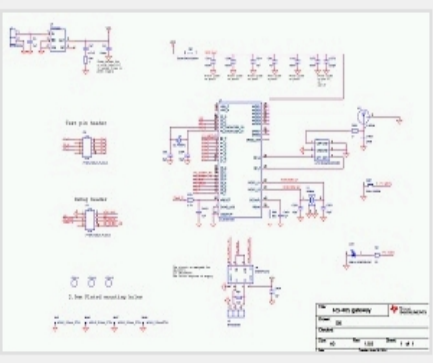

Download Schematic

Design Files

Download ready-to-use system files to speed your design process. Get Viewer.

Download Design Files

Bill of Materials (BOM)

Find the complete list of components in this reference design.

Download BOM

TI Devices (3)

Order samples, get tools and find more information on the TI products in this reference design.

Part Number	Name	Product Family	Sample & Buy	Design Kits & Evaluation Modules
CC2540T	SimpleLink High Temperature Bluetooth Smart Wireless MCU	Wireless Connectivity	Sample & Buy	View Design Kits & Evaluation Modules
SN65HVD485E	Half-Duplex RS-485 Transceiver	Interface	Sample & Buy	View Design Kits & Evaluation Modules
TPS76933	Single Output LDO, 100mA, Fixed(3.3V), Low Quiescent Current, Over Current Limitation	Linear Regulator (LDO)	Sample & Buy	View Design Kits & Evaluation Modules

CAD/CAE symbols

Part #	Package | Pins	CAD File (.bxl)	STEP Model (.stp)
SN65HVD485E	SOIC (D) | 8	Download	Download
	VSSOP (DGK) | 8	Download	Download
	PDIP (P) | 8	Download	Download
TPS76933	SOT (DBV) | 5	Download	Download

Texas Instruments and Accelerated Designs Inc. have collaborated together to provide TI customers with schematic symbols and PCB layout footprints for TI products.

Step 1: Download and install the Ultra Librarian software ZIP: 62MB

Step 2: Download the Symbol and Footprint .bxl file.

- read more -

Technical Documents

Design Files (3)

Title	Abstract	Type	Size (KB)	Date	Views
Bluetooth Low Energy to RS-485 Gateway Design Files		ZIP	850	17 Oct 2014	24
Bluetooth Low Energy to RS-485 Gateway Bill of Materials (BOM)		PDF	215	17 Oct 2014	14
Bluetooth Low Energy to RS-485 Gateway Schematic		PDF	35	17 Oct 2014	38

Related Tools & Software

Software (1)

Bluetooth Low Energy to RS-485 Gateway Software
(ZIP, 297 KB) 32 views, 17 Oct 2014

Support & Community

TI E2E™ community

TI E2E™ Community

As a member of my.TI you can join the TI E2E™ Community where you can ask questions, share ideas and collaborate with fellow engineers and TI experts

Contents are provided "AS IS" by the respective TI and Community contributors and do not constitute TI specifications. See Terms of use.

Engage in the Community

- Amplifiers
- Broadband RF/IF & Digital Radio
- Clocks & Timers
- Data Converters
- DLP® & MEMS
- Interface
- Logic
- Power Management
- Wireless Connectivity

Wikis

Visit the TI Wiki

Your History

Products You Recently Viewed

- TIDA-00132
- PMP9461.7
- PMP4011_1V5
- TIDM-SINGLEPHASESOM
- PMP9108

TI is a global semiconductor design and manufacturing company. Innovate with 100,000+ analog ICs and embedded processors, along with software, tools and the industry's largest sales/support staff.

© Copyright 1995-2014 Texas Instruments Incorporated. All rights reserved.
Trademarks | Privacy policy | Terms of use | Terms of sale