Tiny Wireless Receiver for Low Power Wearable Applications Reference Design

TIDesigns

(ACTIVE) TIDA-00329

Description & Features | Technical Documents | Support & Community | Order Now

View the Important Notice for TI Designs covering authorized use, intellectual property matters and disclaimers.

Tiny Wireless Receiver for Low Power Wearable Applications Reference Design (board photo)

Fully assembled board (shown above) developed for testing and performance validation only, not available for sale.

Description

TI design TIDA-00329 is suitable for low power wearable devices and incorporates a wireless power receiver (bq51003) or a wireless power charger (bq51050B/51B). It features an ultra-small size (5.23 mm x 5.48 mm) and is capable of up to 2-W power delivery. The included schematic illustrates that all 3 devices can be implemented with a single design.

Features

- Small Size: 5.23 mm x 5.48 mm (28.66mm2)
- Adjustable current limit
- Supports 3 devices with no other component change (bq51003, bq51050B, bq51051B)

Schematic/Block Diagram

Quickly understand overall system functionality.

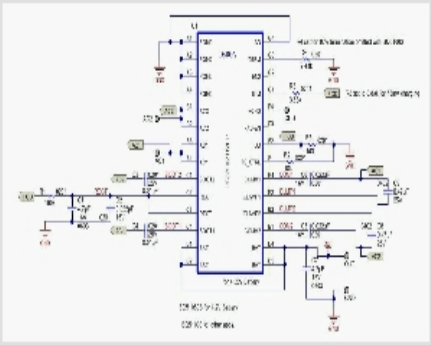

Download Schematic

Test Data

Get results faster with test and simulation data that's been verified.

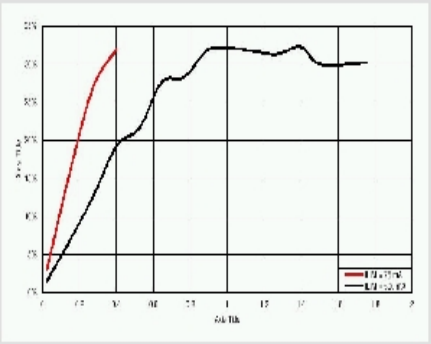

Download Test Data

Design Files

Download ready-to-use system files to speed your design process. Get Viewer.

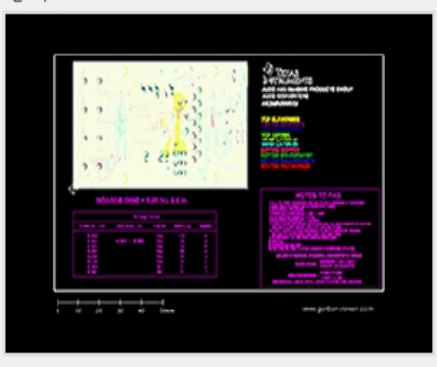

Download Design Files

Bill of Materials (BOM)

Find the complete list of components in this reference design.

Download BOM

TI Devices (3)

Order samples, get tools and find more information on the TI products in this reference design.

Part Number	Name	Product Family	Sample & Buy	Design Kits & Evaluation Modules
BQ51003	BQ51003 Wireless Power Receiver	Battery Management Products	Sample & Buy	View Design Kits & Evaluation Modules
BQ51050B	Qi (WPC) Compliant Highly Integrated Secondary-Side Direct Lithium Ion Charger.	Battery Management Products	Sample & Buy	View Design Kits & Evaluation Modules
BQ51051B	Integrated Wireless Power Li-Ion Charger Receiver, Qi (WPC) Compliant	Battery Management Products	Sample & Buy	Not Available

CAD/CAE symbols

Part #	Package | Pins	CAD File (.bxl)	STEP Model (.stp)
BQ51050B	VQFN (RHL) | 20	Download	-
	DSBGA (YFP) | 28	Download	-
BQ51051B	VQFN (RHL) | 20	Download	-
	DSBGA (YFP) | 28	Download	-

Texas Instruments and Accelerated Designs Inc. have collaborated together to provide TI customers with schematic symbols and PCB layout footprints for TI products.

Step 1: Download and install the Ultra Librarian software ZIP: 62MB

Step 2: Download the Symbol and Footprint .bxl file.

- read more -

Technical Documents

User Guides (1)

Title	Abstract	Type	Size (KB)	Date	Views
TIDA-00329 Test Results (Rev. A)		PDF	1039	21 Oct 2014	143

Design Files (8)

Title	Abstract	Type	Size (KB)	Date	Views
TIDA-00329 Gerber		ZIP	177	06 Oct 2014	26
TIDA-00329 Altium		ZIP	1030	06 Oct 2014	35
TIDA-00329 PCB		PDF	372	06 Oct 2014	44
TIDA-00329 Assembly Drawing (003-BQ51003)		PDF	75	06 Oct 2014	16
TIDA-00329 Assembly Drawing (002-BQ51050B)		PDF	73	06 Oct 2014	15
TIDA-00329 Assembly Drawing (001-BQ5105B)		PDF	73	06 Oct 2014	21
TIDA-00329 BOM		PDF	29	06 Oct 2014	68
TIDA-00329 Schematic		PDF	25	06 Oct 2014	169

Applications

- Medical Meters: Portable
- Wireless Power

Support & Community

TI E2E™ community

TI E2E™ Community

As a member of my.TI you can join the TI E2E™ Community where you can ask questions, share ideas and collaborate with fellow engineers and TI experts

Contents are provided "AS IS" by the respective TI and Community contributors and do not constitute TI specifications. See Terms of use.

Engage in the Community

- Amplifiers
- Broadband RF/IF & Digital Radio
- Clocks & Timers
- Data Converters
- DLP® & MEMS
- Interface
- Logic
- Power Management
- Wireless Connectivity

Wikis

Visit the TI Wiki

Other Support

- TI E2E Community
- Contact Technical Support

Your History

Products You Recently Viewed

- TIDM-LPBP-WIRELESSNODE
- TIDA-00091
- PR251
- PMP9457
- TPS61015REF-157

TI is a global semiconductor design and manufacturing company. Innovate with 100,000+ analog ICs and embedded processors, along with software, tools and the industry's largest sales/support staff.

© Copyright 1995-2014 Texas Instruments Incorporated. All rights reserved.
Trademarks | Privacy policy | Terms of use | Terms of sale