Power Solution for Aptina Image Sensor in Automotive Camera Modules Reference Design

TIDesigns

(ACTIVE) PMP9300 No reviews yet. Add your review and give us feedback

Description & Features | Technical Documents | Support & Community | Order Now

View the Important Notice for TI Designs covering authorized use, intellectual property matters and disclaimers.

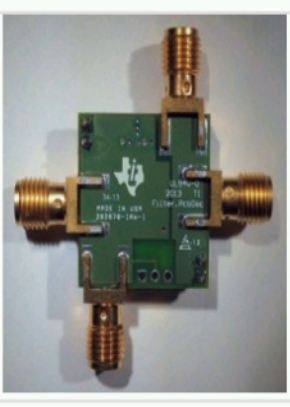

Fully assembled board (shown above) developed for testing and performance validation only, not available for sale.

Description

The reference design provides a compact power solution (20x20mm board size) for the Aptina AR0132 image sensor in automotive camera modules. The design comes with a power supply board and a filter board. The power board has two sync-buck regulators, LM34919C and TPS62231, to provide 1.8V and 2.8V outputs. RC output filters are designed for the core, analog and I/O supply rails required by the image sensor in order to reduce the ripple and ensure proper power-up sequencing. The input voltage range is from 4.5V to 50V suitable for 12V automotive battery supply. The filter board is designed to enable the power over coax cable configuration, which allows transferring power and the FPD-Link III signal over one cable. There is also an input line filter option on both boards in case the power-over-coax configuration is not desired.

Features

- Power supply designed for Aptina AR0132 image sensor in automotive camera
- Miniature solution size 20x20mm
- 1.8V and 2.8V output with output filter to cover the core, analog, I/O rails and ensure high image quality
- 4.5-50V operating input voltage range, ideal for 12V automotive battery
- Filter board allows transferring power and FPD-Link III signal over coax cable configuration

TI's Standard Terms and Conditions for Evaluation Modules apply.

Schematic/Block Diagram

Quickly understand overall system functionality.

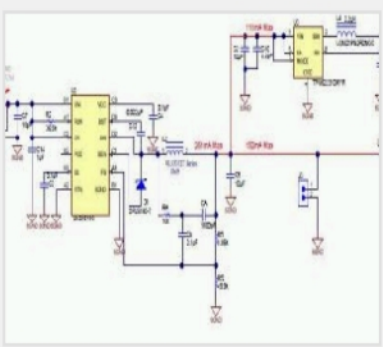

Download Schematic

Test Data

Get results faster with test and simulation data that's been verified.

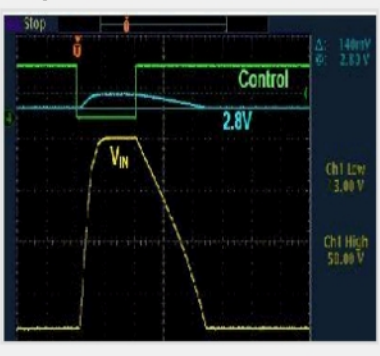

Download Test Data

Design Files

Download ready-to-use system files to speed your design process. Get Viewer.

Download Design Files

Bill of Materials (BOM)

Find the complete list of components in this reference design.

Download BOM

TI Devices (2)

Order samples, get tools and find more information on the TI products in this reference design.

Part Number	Name	Product Family	Sample & Buy	Design Kits & Evaluation Modules
LM34919C-Q1	Automotive 4.5-50V Wide Vin 600mA 2.6MHz Ultra-Small Constant On-Time Non-Synchronous Buck Regulator	Converter (Integrated Switch)	Sample & Buy	View Design Kits & Evaluation Modules
TPS62231	3 MHz Ultra Small Step Down Converter in 1x1.5 SON Package	Converter (Integrated Switch)	Sample & Buy	View Design Kits & Evaluation Modules

CAD/CAE symbols

Part #	Package | Pins	CAD File (.bxl)	STEP Model (.stp)
TPS62231	USON (DRY) | 6	Download	-

Texas Instruments and Accelerated Designs Inc. have collaborated together to provide TI customers with schematic symbols and PCB layout footprints for TI products.

Step 1: Download and install the Ultra Librarian software ZIP: 62MB

Step 2: Download the Symbol and Footprint .bxl file.

- read more -

Technical Documents

User Guides (2)

Title	Abstract	Type	Size (KB)	Date	Views
PMP9300 Application Diagram		PDF	26	10 Dec 2013	922
PMP9300 Test Results		PDF	637	15 Oct 2013	78

Design Files (9)

Title	Abstract	Type	Size (KB)	Date	Views
PMP9300 PCB (Power Board)		PDF	266	15 Oct 2013	106
PMP9300 PCB (Filter Board)		PDF	163	15 Oct 2013	70
PMP9300 Power Board BOM		PDF	107	15 Oct 2013	119
PMP9300 Filter Board BOM		PDF	98	15 Oct 2013	82
PMP9300 Power Board With Onboard Filter Schematic		PDF	118	15 Oct 2013	193
PMP9300 Power Board Schematic		PDF	125	15 Oct 2013	160
PMP9300 Filter Board Schematic		PDF	103	15 Oct 2013	982
PMP9300 Gerber (Power Board)		ZIP	61	15 Oct 2013	74
PMP9300 Gerber (Filter Board)		ZIP	45	15 Oct 2013	72

Support & Community

TI E2E™ community

TI E2E™ Community

As a member of my.TI you can join the TI E2E™ Community where you can ask questions, share ideas and collaborate with fellow engineers and TI experts

Contents are provided "AS IS" by the respective TI and Community contributors and do not constitute TI specifications. See Terms of use.

Engage in the Community

- Amplifiers
- Broadband RF/IF & Digital Radio
- Clocks & Timers
- Data Converters
- DLP® & MEMS
- Interface
- Logic
- Power Management
- Wireless Connectivity

Wikis

Visit the TI Wiki

Videos

Leading source for power reference designs

TI's industry leading PowerLab™ reference design library has now evolved into TI Designs. This video explains how to use the enhanced selection tool within TI Designs to quickly and efficiently search

Posted: 08-Oct-2014
Duration: 1:00
Views: 707
Tags: power management, power reference design, power management solutions, powerlab, power management designs, power design solutions, ti designs-power, ti designs, portable powerline power

Click here to jump start your design with TI Designs for Power Management

Related Videos

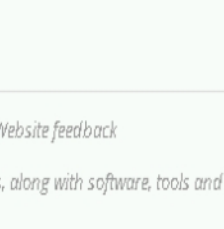

Leading source for power reference designs

Power Tip 58: Power supply grounding; which camp are you in?

Other Support

- TI E2E Community
- Contact Technical Support

Customer Reviews BETA

No reviews yet. Add your review and give us feedback

Your History

Products You Recently Viewed

- PMP4936
- tps22924devm-532
- PMP5855.3
- PMP4807
- PMP7371

TI is a global semiconductor design and manufacturing company. Innovate with 100,000+ analog ICs and embedded processors, along with software, tools and the industry's largest sales/support staff.

© Copyright 1995-2014 Texas Instruments Incorporated. All rights reserved.
Trademarks | Privacy policy | Terms of use | Terms of sale