Power Reference Design for Xilinx® Zynq-7000

(ACTIVE) PMP7877.5

Description & Features | Technical Documents | Support & Community | Order Now

View the Important Notice for TI Designs covering authorized use, intellectual property matters and disclaimers.

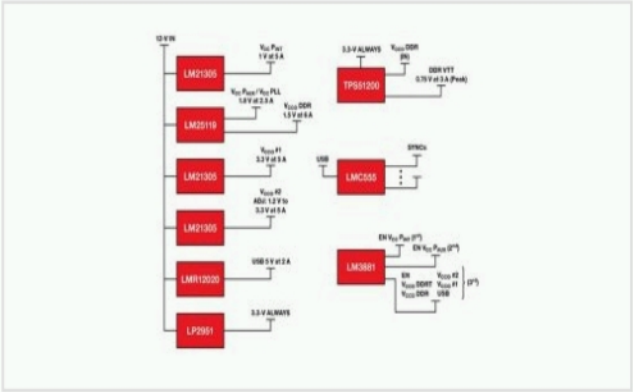

Block Diagram | Xilinx | Zynq 7000

Description

This is a multi-output buck converter design that has an input voltage range of 10.8Vin to 13.2Vin and has seven regulated outputs: 1Vout @ 5A, 1.8Vout @ 2.5A, 1.5Vout @ 6A, 3.3Vout @ 5A, 3.3Vout @ 5A, 5Vout @ 2A, and 0.75Vout @ 1A continous/3Apeak. This design has been approved and tested by Xilinx.

When the ZC702 development kit looks like a good choice, but a smaller or more cost-effective power solution is required, look at TI's alternative power solution below.

Benefits

- Tested and proven solution: Xilinx application engineers have verified the solution with the ZC702 production kit
- Half the size (footprint) of the power solution on the ZC702 production development kit
- A fifth of the cost of the power solution on the ZC702 production development kit
- Available resources: Schematics, BOM and Gerber files

Fully assembled board (shown above) developed for testing and performance validation only, not available for sale.

TI's Standard Terms and Conditions for Evaluation Modules apply.

Bill of Materials (BOM)

Find the complete list of components in this reference design.

Download BOM

Parametrics

	PMP7877.5
Vin (Max) (V)	13.2
Vin (Min) (V)	10.8
Vout (Nom) (V)	3.3
Iout (Max) (A)	5
Output Power	16.5
Isolated/Non-Isolated	Non-Isolated
Input Type	DC
Topology	Buck- Synchronous

TI Devices (7)

Order samples, get tools and find more information on the TI products in this reference design.

Part Number	Name	Product Family	Sample & Buy	Design Kits & Evaluation Modules
LM21305	3-18V, 5A, Current Mode Synchronous Buck Regulator with Adjustable Frequency	Converter (Integrated Switch)	Sample & Buy	View Design Kits & Evaluation Modules
LM25119	4.5-42V Wide Vin, Current Mode Dual Synchronous Buck Controller	Controller (External	Sample & Buy	View Design Kits & Evaluation

Show More

CAD/CAE symbols

Part #	Package | Pins	CAD File (.bxl)	STEP Model (.stp)
LM21305	WQFN (RSG) | 28	Download	Download
LM25119	WQFN (RTV) | 32	Download	Download
LM3881	VSSOP (DGK) | 8	Download	Download
LP2951	SOIC (D) | 8	Download	Download
	VSSOP (DGK) | 8	Download	Download
TPS51200	VSON (DRC) | 10	Download	-

Texas Instruments and Accelerated Designs Inc. have collaborated together to provide TI customers with schematic symbols and PCB layout footprints for TI products.

Step 1: Download and install the Ultra Librarian software ZIP: 62MB

Step 2: Download the Symbol and Footprint .bxl file.

- read more -

Technical Documents

User Guides (1)

Title	Abstract	Type	Size (KB)	Date	Views
PMP7877 Test Results		PDF	1488	12 Apr 2013	74

Selection Guides (1)

Title	Abstract	Type	Size (KB)	Date	Views
Power for Xilinx(R) ZYNQ(R) ZC702 Development Kit Guide (Rev. A)		PDF	1305	01 Oct 2013	344

Design Files (3)

Title	Abstract	Type	Size (KB)	Date	Views
PMP7877 Gerber		ZIP	1246	12 Apr 2013	30
PMP7877 BOM		PDF	71	12 Apr 2013	104
PMP7877 Schematic		PDF	182	12 Apr 2013	153

Support & Community

TI E2E™ community

TI E2E™ Community

As a member of my.TI you can join the TI E2E™ Community where you can ask questions, share ideas and collaborate with fellow engineers and TI experts

Contents are provided "AS IS" by the respective TI and Community contributors and do not constitute TI specifications. See Terms of use.

Engage in the Community

- Amplifiers
- Broadband RF/IF & Digital Radio
- Clocks & Timers
- Data Converters
- DLP® & MEMS
- Interface
- Logic
- Power Management
- Wireless Connectivity

Wikis

Visit the TI Wiki

Videos

Leading source for power reference designs

TI's industry leading PowerLab™ reference design library has now evolved into TI Designs. This video explains how to use the enhanced selection tool within TI Designs to quickly and efficiently search

Posted: 08-Oct-2014
Duration: 1:00
Views: 707
Tags: power management, power reference design, power management solutions, powerlab, power management designs, power design solutions, ti designs-power, ti designs, portable powerline power

Click here to jump start your design with TI Designs for Power Management

Related Videos

Leading source for power reference designs

Power Tip 58: Power supply grounding; which camp are you in?

Other Support

- TI E2E Community
- Contact Technical Support

Your History

Products You Recently Viewed

- PMP4627
- PMP7877.7
- PMP8006
- PMP4626.2
- PMP7877.1

TI is a global semiconductor design and manufacturing company. Innovate with 100,000+ analog ICs and embedded processors, along with software, tools and the industry's largest sales/support staff.

© Copyright 1995-2014 Texas Instruments Incorporated. All rights reserved.
Trademarks | Privacy policy | Terms of use | Terms of sale