Isolated Power Supplies Reference Design

(ACTIVE) TIDA-00004 No reviews yet. Add your review and give us feedback

Description & Features | Technical Documents | Support & Community | Order Now

View the Important Notice for TI Designs covering authorized use, intellectual property matters and disclaimers.

Description

This reference design demonstrates how to create a 3.3V or 5V isolated power supply for isolated RS-485, CAN or similar applications. There are five separate supplies on the board for different cases of input and output voltage, with and without regulated outputs.

Features

- Push-pull driver for small transformers
- High primary-side current drive
- Low ripple on rectified output
- Small footprint
- Single 3.3V or 5V supply
- This reference design is orderable

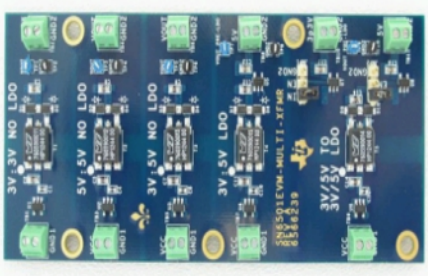

SN6501 Transformer Driver for Isolated Power Supplies Evaluation Module

View available purchase options for designs kits, evaluation modules and/or the bill of materials.

$49.00(USD)

Order Now

Schematic/Block Diagram

Quickly understand overall system functionality.

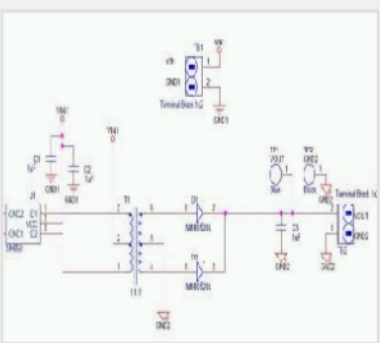

Download Schematic

Test Data

Get results faster with test and simulation data that's been verified.

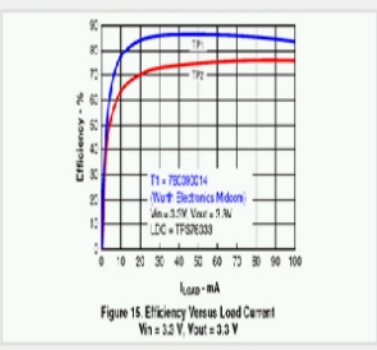

Download Test Data

Design Files

Download ready-to-use system files to speed your design process. Get Viewer.

Download Design Files

Bill of Materials (BOM)

Find the complete list of components in this reference design.

Download BOM

Order Now

Part Number	Buy from Texas Instruments or Third Party	Buy from Authorized Distributor	Status
SN6501-MULXFMR-EVM: SN6501 Transformer Driver for Isolated Power Supplies Evaluation Module	$49.00(USD) In Stock Typically Ships in 1 to 3 Business Days Buy from TI	Pricing may vary. Buy from distributor	ACTIVE

Contact a Distributor Massachusetts Go

TI's Standard Terms and Conditions for Evaluation Modules apply.

TI Devices (1)

Order samples, get tools and find more information on the TI products in this reference design.

Part Number	Name	Product Family	Sample & Buy	Design Kits & Evaluation Modules
SN6501	Transformer Driver for Isolated Power Supplies	Converter (Integrated Switch)	Sample & Buy	View Design Kits & Evaluation Modules

Technical Documents

User Guides (1)

Title	Abstract	Type	Size (KB)	Date	Views
TIDA-00004 Test Results		PDF	36	26 Sep 2013	38

Design Files (3)

Title	Abstract	Type	Size (KB)	Date	Views
TIDA-00004 Gerber		ZIP	321	26 Sep 2013	30
TIDA-00004 BOM		PDF	108	26 Sep 2013	36
TIDA-00004 Schematic		PDF	58	26 Sep 2013	89

Support & Community

TI E2E™ community

TI E2E™ Community

As a member of my.TI you can join the TI E2E™ Community where you can ask questions, share ideas and collaborate with fellow engineers and TI experts

Contents are provided "AS IS" by the respective TI and Community contributors and do not constitute TI specifications. See Terms of use.

Engage in the Community

- Amplifiers
- Broadband RF/IF & Digital Radio
- Clocks & Timers
- Data Converters
- DLP® & MEMS
- Interface
- Logic
- Power Management
- Wireless Connectivity

Wikis

Visit the TI Wiki

Other Support

- TI E2E Community
- Contact Technical Support

Customer Reviews BETA

No reviews yet. Add your review and give us feedback

Your History

Products You Recently Viewed

- PMP4862.3
- tps65279vevm
- PMP4862.2
- tps65276vevm
- tlv62080evm-756

TI is a global semiconductor design and manufacturing company. Innovate with 100,000+ analog ICs and embedded processors, along with software, tools and the industry's largest sales/support staff.

© Copyright 1995-2014 Texas Instruments Incorporated. All rights reserved.
Trademarks | Privacy policy | Terms of use | Terms of sale