High performance buck converter with VID interface to supply TI TMS320 TCI6634

TIDesigns

(ACTIVE) PMP7047

Description & Features | Technical Documents | Support & Community | Order Now

View the Important Notice for TI Designs covering authorized use, intellectual property matters and disclaimers.

Description

The PMP7047 reference design uses the TPS56221 25A buck converter with the LM10010 6-bit VID interface chip to enable Adaptive Voltage Scaling (AVS) and tight voltage regulation of the TMS320 TCI6634 DSP core rail. At 300KHz switching frequency it is optimized for high efficiency and low power loss, while keeping component count and PCB area small.

Features

- AVS Capability- dynamically adjust Vo through LM10010 6-bit VID chip
- Universal pad for various output inductors for easier testing
- 13V to 14V Input Voltage
- 0.8V to 1.2V output voltage, 25A maximum output current
- 300KHz switching frequency
- ~92% peak efficiency

Fully assembled board (shown above) developed for testing and performance validation only, not available for sale.

TI's Standard Terms and Conditions for Evaluation Modules apply.

Schematic/Block Diagram

Quickly understand overall system functionality.

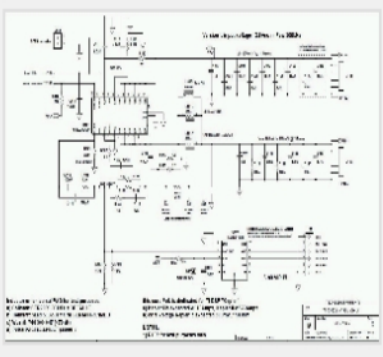

Download Schematic

Test Data

Get results faster with test and simulation data that's been verified.

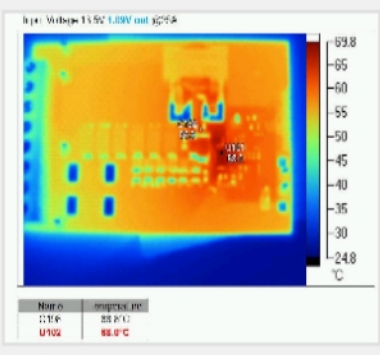

Download Test Data

Design Files

Download ready-to-use system files to speed your design process. Get Viewer.

Download Design Files

Bill of Materials (BOM)

Find the complete list of components in this reference design.

Download BOM

Parametrics

	PMP7047
Vin (Min) (V)	9
Vin (Max) (V)	14
Vout (Nom) (V)	1
Iout (Max) (A)	25
Output Power	25
Isolated/Non-Isolated	Non-Isolated
Input Type	DC
Topology	Buck- Integrated Switch

TI Devices (2)

Order samples, get tools and find more information on the TI products in this reference design.

Part Number	Name	Product Family	Sample & Buy	Design Kits & Evaluation Modules
LM10011	1% Accuracy 4/6-Bit VID Voltage Programmer for Point of Load Regulator w/ Adj Start-Up Current	Power Supply Support	Sample & Buy	View Design Kits & Evaluation Modules
TPS56221	4.5V to 14V Input, 25A Synchronous Step-Down SWIFT™ Converter	Converter (Integrated Switch)	Sample & Buy	View Design Kits & Evaluation Modules

CAD/CAE symbols

Part #	Package | Pins	CAD File (.bxl)	STEP Model (.stp)
TPS56221	LSON-CLIP (DQP) | 22	Download	-

Texas Instruments and Accelerated Designs Inc. have collaborated together to provide TI customers with schematic symbols and PCB layout footprints for TI products.

Step 1: Download and install the Ultra Librarian software ZIP: 62MB

Step 2: Download the Symbol and Footprint .bxl file.

- read more -

Technical Documents

User Guides (1)

Title	Abstract	Type	Size (KB)	Date	Views
PMP7047 Test Results		PDF	346	01 Mar 2012	50

Design Files (3)

Title	Abstract	Type	Size (KB)	Date	Views
PMP7047 Universal		ZIP	36	27 Jun 2014	65
PMP7047 Schematic		PDF	39	01 Mar 2012	114
PMP7047 BOM		PDF	21	01 Mar 2012	44

Applications

- Power: Telecom DC/DC Module: Analog

Support & Community

TI E2E™ community

TI E2E™ Community

As a member of my.TI you can join the TI E2E™ Community where you can ask questions, share ideas and collaborate with fellow engineers and TI experts

Contents are provided "AS IS" by the respective TI and Community contributors and do not constitute TI specifications. See Terms of use.

Engage in the Community

- Amplifiers
- Broadband RF/IF & Digital Radio
- Clocks & Timers
- Data Converters
- DLP® & MEMS
- Interface
- Logic
- Power Management
- Wireless Connectivity

Wikis

Visit the TI Wiki

Videos

Leading source for power reference designs

TI's industry leading PowerLab™ reference design library has now evolved into TI Designs. This video explains how to use the enhanced selection tool within TI Designs to quickly and efficiently search

Posted: 08-Oct-2014
Duration: 1:00
Views: 728
Tags: power management, power reference design, power management solutions, powerlab, power management designs, power design solutions, ti designs-power, ti designs, portable powerline power

Click here to jump start your design with TI Designs for Power Management

Related Videos

Leading source for power reference designs

Power Tip 58: Power supply grounding; which camp are you in?

Other Support

- TI E2E Community
- Contact Technical Support

Your History

Products You Recently Viewed

- pmp4301
- PMP5040
- PMP1595
- PMP4642
- PMP5211

TI is a global semiconductor design and manufacturing company. Innovate with 100,000+ analog ICs and embedded processors, along with software, tools and the industry's largest sales/support staff.

© Copyright 1995-2014 Texas Instruments Incorporated. All rights reserved.
Trademarks | Privacy policy | Terms of use | Terms of sale