Low Cost LCD Bias Supply Reference Design

(ACTIVE) PMP10051.3

Description & Features | Technical Documents | Support & Community | Order Now

View the Important Notice for TI Designs covering authorized use, intellectual property matters and disclaimers.

Low Cost LCD Bias Supply Reference Design

Description

This design provides, with only one switcher and a coupled inductor, four output voltages for biasing a liquid crystal display. The topology is a Sepic with stacked windings, which offers good performance and low EMI.

Features

- Low cost
- Good performance

TI's Standard Terms and Conditions for Evaluation Modules apply.

Fully assembled board (shown above) developed for testing and performance validation only, not available for sale.

Schematic/Block Diagram

Quickly understand overall system functionality.

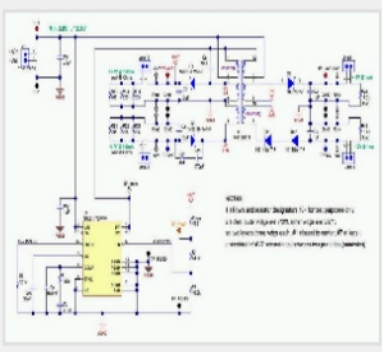

Download Schematic

Test Data

Get results faster with test and simulation data that's been verified.

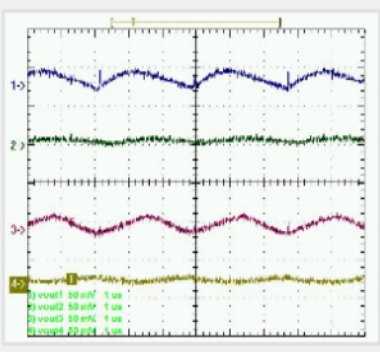

Download Test Data

Design Files

Download ready-to-use system files to speed your design process. Get Viewer.

Download Design Files

Bill of Materials (BOM)

Find the complete list of components in this reference design.

Download BOM

Parametrics

	PMP10051.3
Vin (Min) (V)	3
Vin (Max) (V)	13.2
Vout (Nom) (V)	-12
Iout (Max) (A)	.001
Output Power	.012
Isolated/Non-Isolated	Non-Isolated
Input Type	DC
Topology	Sepic- Integrated Switch

TI Devices (1)

Order samples, get tools and find more information on the TI products in this reference design.

Part Number	Name	Product Family	Sample & Buy	Design Kits & Evaluation Modules
TPS61175	3-A High Voltage Boost Converter with Soft-start and Programmable Switching Frequency	Converter (Integrated Switch)	Sample & Buy	View Design Kits & Evaluation Modules

CAD/CAE symbols

Part #	Package | Pins	CAD File (.bxl)	STEP Model (.stp)
TPS61175	HTSSOP (PWP) | 14	Download	Download

Texas Instruments and Accelerated Designs Inc. have collaborated together to provide TI customers with schematic symbols and PCB layout footprints for TI products.

Step 1: Download and install the Ultra Librarian software ZIP: 62MB

Step 2: Download the Symbol and Footprint .bxl file.

- read more -

Technical Documents

User Guides (1)

Title	Abstract	Type	Size (KB)	Date	Views
PMP10051 Test Results		PDF	302	20 Nov 2014	0

Design Files (4)

Title	Abstract	Type	Size (KB)	Date	Views
PMP10051 Gerber		ZIP	30	20 Nov 2014	0
PMP10051 Assembly Drawing		PDF	272	20 Nov 2014	0
PMP10051 BOM		PDF	35	20 Nov 2014	4
PMP10051 Schematic		PDF	129	20 Nov 2014	5

Support & Community

TI E2E™ community

TI E2E™ Community

As a member of my.TI you can join the TI E2E™ Community where you can ask questions, share ideas and collaborate with fellow engineers and TI experts

Contents are provided "AS IS" by the respective TI and Community contributors and do not constitute TI specifications. See Terms of use.

Engage in the Community

- Amplifiers
- Broadband RF/IF & Digital Radio
- Clocks & Timers
- Data Converters
- DLP® & MEMS
- Interface
- Logic
- Power Management
- Wireless Connectivity

Wikis

Visit the TI Wiki

Other Support

- TI E2E Community
- Contact Technical Support

Your History

Products You Recently Viewed

- lm2621eval
- TPS2483EVM-157

TI is a global semiconductor design and manufacturing company. Innovate with 100,000+ analog ICs and embedded processors, along with software, tools and the industry's largest sales/support staff.

© Copyright 1995-2014 Texas Instruments Incorporated. All rights reserved.
Trademarks | Privacy policy | Terms of use | Terms of sale