Altera Cyclone V SoC FPGA Power Reference Design

(ACTIVE) PMP9353 No reviews yet. Add your review and give us feedback

Description & Features | Technical Documents | Support & Community | Order Now

View the Important Notice for TI Designs covering authorized use, intellectual property matters and disclaimers.

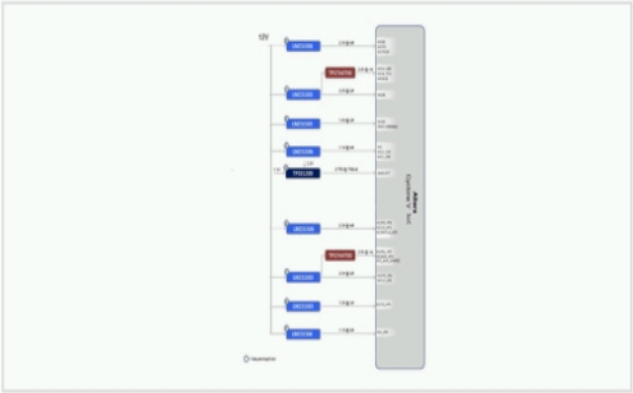

Description

The PMP9353 reference design is a complete power solution for Altera Cyclone V SoC devices. This design uses several LMZ3 series modules , two LDOs, and a DDR termination regulator to provide all the necessary rails to power the SoC chip. This design also shows correct power-up sequencing.

Features

- Provides all the power rails needed to power an Altera Cyclone V SoC
- Design optimized to support a 12V input
- Ease of use with integrated LMZ3 series power modules
- Optimum combination of switching regulators and LDOs provides the best power distrubution tree
- Supports DDR3 memory device
- This design is tested and ready to power up an Cyclone V SoC

Fully assembled board (shown above) developed for testing and performance validation only, not available for sale.

TI's Standard Terms and Conditions for Evaluation Modules apply.

Schematic/Block Diagram

Quickly understand overall system functionality.

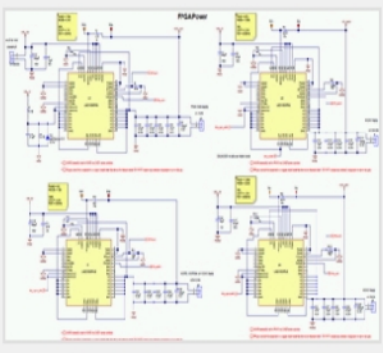

Download Schematic

Test Data

Get results faster with test and simulation data that's been verified.

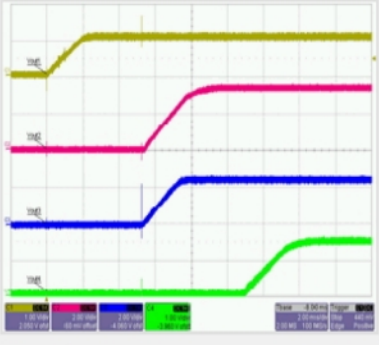

Download Test Data

Design Files

Download ready-to-use system files to speed your design process. Get Viewer.

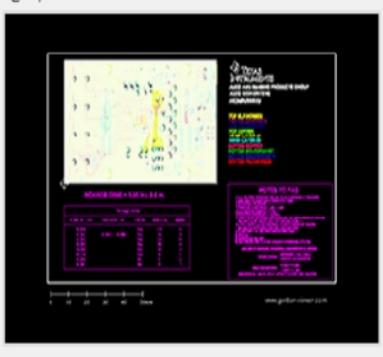

Download Design Files

Bill of Materials (BOM)

Find the complete list of components in this reference design.

Download BOM

TI Devices (5)

Order samples, get tools and find more information on the TI products in this reference design.

Part Number	Name	Product Family	Sample & Buy	Design Kits & Evaluation Modules
LM3880	Power Sequencer	Power Management	Sample & Buy	View Design Kits & Evaluation Modules
LMZ31503	3A SIMPLE SWITCHER® Power Module with 4.5V-14.5V Input in QFN package	Non-Isolated	Sample & Buy	View Design Kits & Evaluation

Show More

CAD/CAE symbols

Part #	Package | Pins	CAD File (.bxl)	STEP Model (.stp)
LM3880	SOT (DBV) | 6	Download	Download
LMZ31503	B1QFN (RUQ) | 47	Download	-
LMZ31506	B1QFN (RUQ) | 47	Download	-
TPS51200	VSON (DRC) | 10	Download	-

Texas Instruments and Accelerated Designs Inc. have collaborated together to provide TI customers with schematic symbols and PCB layout footprints for TI products.

Step 1: Download and install the Ultra Librarian software ZIP: 62MB

Step 2: Download the Symbol and Footprint .bxl file.

- read more -

Technical Documents

User Guides (1)

Title	Abstract	Type	Size (KB)	Date	Views
PMP9353 Test Results		PDF	2876	25 Aug 2014	149

Design Files (3)

Title	Abstract	Type	Size (KB)	Date	Views
PMP9353 BOM		PDF	84	25 Aug 2014	170
PMP9353 Schematic		PDF	1254	25 Aug 2014	368
PMP9353 Gerber		ZIP	1230	18 Mar 2014	124

Support & Community

TI E2E™ community

TI E2E™ Community

As a member of my.TI you can join the TI E2E™ Community where you can ask questions, share ideas and collaborate with fellow engineers and TI experts

Contents are provided "AS IS" by the respective TI and Community contributors and do not constitute TI specifications. See Terms of use.

Engage in the Community

- Amplifiers
- Broadband RF/IF & Digital Radio
- Clocks & Timers
- Data Converters
- DLP® & MEMS
- Interface
- Logic
- Power Management
- Wireless Connectivity

Wikis

Visit the TI Wiki

Videos

Leading source for power reference designs

TI's industry leading PowerLab™ reference design library has now evolved into TI Designs. This video explains how to use the enhanced selection tool within TI Designs to quickly and efficiently search

Posted: 08-Oct-2014
Duration: 1:00
Views: 930
Tags: power management, power reference design, power management solutions, powerlab, power management designs, power design solutions, ti designs-power, ti designs, portable powerline power

Click here to jump start your design with TI Designs for Power Management

Related Videos

Leading source for power reference designs

Other Support

- TI E2E Community
- Contact Technical Support

Customer Reviews BETA

No reviews yet. Add your review and give us feedback

Your History

Products You Recently Viewed

- PMP10051.3
- lm2621eval
- TPS2483EVM-157

TI is a global semiconductor design and manufacturing company. Innovate with 100,000+ analog ICs and embedded processors, along with software, tools and the industry's largest sales/support staff.

© Copyright 1995-2014 Texas Instruments Incorporated. All rights reserved.
Trademarks | Privacy policy | Terms of use | Terms of sale