Xilinx(r) Ultrascale(r) 16nm FPGA/SoC Power Solution for Mobile Radio Basestation

(ACTIVE) PMP10555

Description & Features | Technical Documents | Support & Community | Order Now

View the Important Notice for TI Designs covering authorized use, intellectual property matters and disclaimers.

Description

The PMP10555 reference design provides all the power supply rails necessary to power Xilinx® Ultrascale® 16nm family of FPGAs/SoCs in a mobile radio basestation application. This design uses a PMBus compatible 20A integrated FET buck converter for the core and two multi-output buck regulator ICs to provide the remaining supplies necessary rails to power the FPGA. It also features two LM3880's for flexible power up and power down sequencing. This design uses a 12V input.

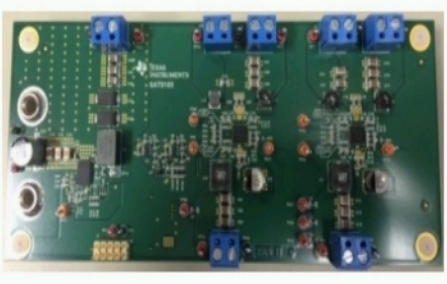

Xilinx Ultrascale 16nm FPGA/SoC Power Solution for Mobile Radio Basestation Reference Design

Features

- Provides all the power supply rails needed for a Xilinx® Ultrascale® Series FPGA for a mobile radio basestation
- Design optimized to support a 12V input
- PMBUS interface with output voltage and current reporting for the core voltage
- On board power up and power down sequencing
- Voltage margining at the core voltage

Fully assembled board (shown above) developed for testing and performance validation only, not available for sale.

TI's Standard Terms and Conditions for Evaluation Modules apply.

Schematic/Block Diagram

Quickly understand overall system functionality.

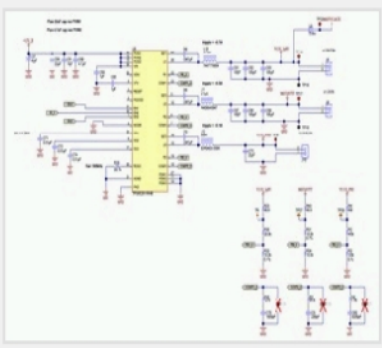

Download Schematic

Test Data

Get results faster with test and simulation data that's been verified.

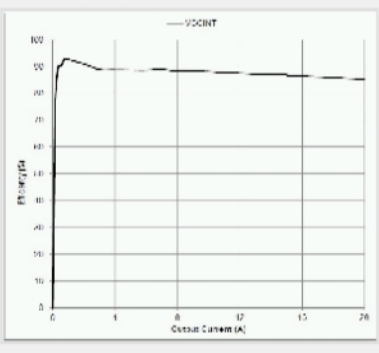

Download Test Data

Design Files

Download ready-to-use system files to speed your design process. Get Viewer.

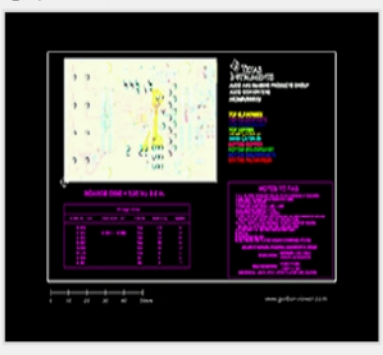

Download Design Files

Bill of Materials (BOM)

Find the complete list of components in this reference design.

Download BOM

TI Devices (4)

Order samples, get tools and find more information on the TI products in this reference design.

Part Number	Name	Product Family	Sample & Buy	Design Kits & Evaluation Modules
LM3880	Power Sequencer	Power Management	Sample & Buy	View Design Kits & Evaluation Modules
TPS544B20	4.5-18V 20A SWIFT™ with PMBus™ Programmability and Voltage, Current and	Converter (Integrated	Sample & Buy	View Design Kits & Evaluation

Show More

CAD/CAE symbols

Part #	Package | Pins	CAD File (.bxl)	STEP Model (.stp)
LM3880	SOT (DBV) | 6	Download	Download
TPS544B20	LQFN-CLIP (RVF) | 40	Download	-
TPS560200	SOT (DBV) | 5	Download	Download

Texas Instruments and Accelerated Designs Inc. have collaborated together to provide TI customers with schematic symbols and PCB layout footprints for TI products.

Step 1: Download and install the Ultra Librarian software ZIP: 62MB

Step 2: Download the Symbol and Footprint .bxl file.

- read more -

Technical Documents

User Guides (1)

Title	Abstract	Type	Size (KB)	Date	Views
PMP10555 Test Results		PDF	2307	31 Oct 2014	18

Design Files (3)

Title	Abstract	Type	Size (KB)	Date	Views
PMP10555 Gerber		ZIP	993	31 Oct 2014	22
PMP10555 BOM		PDF	88	31 Oct 2014	13
PMP10555 Schematic		PDF	892	31 Oct 2014	35

Applications

- Mobile BTS (RAN, MSS, 3G Packet Core, HLR)

Support & Community

TI E2E™ community

TI E2E™ Community

As a member of my.TI you can join the TI E2E™ Community where you can ask questions, share ideas and collaborate with fellow engineers and TI experts

Contents are provided "AS IS" by the respective TI and Community contributors and do not constitute TI specifications. See Terms of use.

Engage in the Community

- Amplifiers
- Broadband RF/IF & Digital Radio
- Clocks & Timers
- Data Converters
- DLP® & MEMS
- Interface
- Logic
- Power Management
- Wireless Connectivity

Wikis

Visit the TI Wiki

Other Support

- TI E2E Community
- Contact Technical Support

Your History

Products You Recently Viewed

- PMP10051.1
- PMP9357
- TIDM-KEYBOARD
- TIDA-00296
- TIDA-00252

TI is a global semiconductor design and manufacturing company. Innovate with 100,000+ analog ICs and embedded processors, along with software, tools and the industry's largest sales/support staff.

© Copyright 1995-2014 Texas Instruments Incorporated. All rights reserved.
Trademarks | Privacy policy | Terms of use | Terms of sale