48V Vin Nominal, 100V Vout @ 1A Single-Phase Synchronous Boost Converter

TIDesigns

(ACTIVE) PMP7933

Description & Features | Technical Documents | Support & Community | Order Now

View the Important Notice for TI Designs covering authorized use, intellectual property matters and disclaimers.

48V Vin Nominal, 100V Vout @ 1A Single-Phase Synchronous Boost Converter

Description

PMP7933 is a single-phase synchronous boost converter using the LM5122 controller IC. The design accepts an input voltage of 48Vin +/-5% and provides an output voltage of 100Vout capable of supplying a maximum of 1A of current to the load. The design was built on the PMP7896 revB PCB.

Features

- Synchronous boost converter enables high efficiency of 93%
- Low temperature operation, no additional cooling needed
- Operates at 48V telecom bus voltage
- Board was designed and tested for 100W operation.

TI's Standard Terms and Conditions for Evaluation Modules apply.

Fully assembled board (shown above) developed for testing and performance validation only, not available for sale.

Schematic/Block Diagram

Quickly understand overall system functionality.

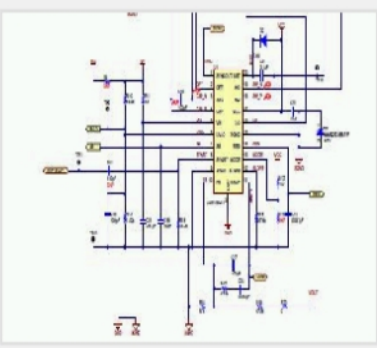

Download Schematic

Test Data

Get results faster with test and simulation data that's been verified.

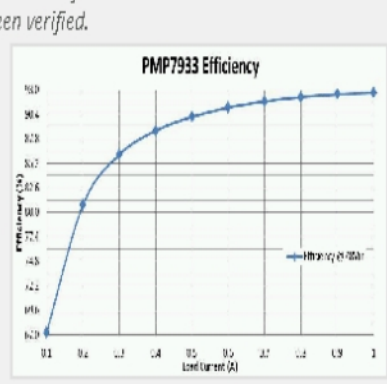

Download Test Data

Design Files

Download ready-to-use system files to speed your design process. Get Viewer.

Download Design Files

Bill of Materials (BOM)

Find the complete list of components in this reference design.

Download BOM

Parametrics

	PMP7933
Vin (Max) (V)	50.5
Vin (Min) (V)	45.5
Vout (Nom) (V)	100
Iout (Max) (A)	1
Output Power	100
Isolated/Non-Isolated	Non-Isolated
Input Type	DC
Topology	Boost- Synchronous

TI Devices (1)

Order samples, get tools and find more information on the TI products in this reference design.

Part Number	Name	Product Family	Sample & Buy	Design Kits & Evaluation Modules
LM5122-Q1	Automotive Grade, 3-65V Wide Vin, Current Mode Synchronous Boost Controller with Multiphase Capabili	Controller (External Switch)	Sample & Buy	View Design Kits & Evaluation Modules

Technical Documents

User Guides (1)

Title	Abstract	Type	Size (KB)	Date	Views
PMP7933 Test Results		PDF	674	24 Oct 2014	17

Design Files (3)

Title	Abstract	Type	Size (KB)	Date	Views
PMP7933 Altium		ZIP	446	24 Oct 2014	12
PMP7933 BOM		PDF	23	24 Oct 2014	19
PMP7933 Schematic		PDF	112	24 Oct 2014	35

Support & Community

TI E2E™ community

TI E2E™ Community

As a member of my.TI you can join the TI E2E™ Community where you can ask questions, share ideas and collaborate with fellow engineers and TI experts

Contents are provided "AS IS" by the respective TI and Community contributors and do not constitute TI specifications. See Terms of use.

Engage in the Community

- Amplifiers
- Broadband RF/IF & Digital Radio
- Clocks & Timers
- Data Converters
- DLP® & MEMS
- Interface
- Logic
- Power Management
- Wireless Connectivity

Wikis

Visit the TI Wiki

Other Support

- TI E2E Community
- Contact Technical Support

Your History

Products You Recently Viewed

- PMP10415.2
- PMP10051.2
- TIDA-00330
- TIDC-WMBUS-868MHZ
- PMP10415.1

TI is a global semiconductor design and manufacturing company. Innovate with 100,000+ analog ICs and embedded processors, along with software, tools and the industry's largest sales/support staff.

© Copyright 1995-2014 Texas Instruments Incorporated. All rights reserved.
Trademarks | Privacy policy | Terms of use | Terms of sale

ecia MEMBER