Automotive Ultrasonic Fluid Level/Quality Measurement Reference Design

TIDesigns

(ACTIVE) TIDA-00322

Description & Features | Technical Documents | Support & Community | Order Now

View the Important Notice for TI Designs covering authorized use, intellectual property matters and disclaimers.

Key Document

- TIDA-00322 Quick Start Guide (PDF 759 KB)
  23 Oct 2014 100 views
- TIDA-00322 Design Considerations and BOM Analysis (PDF 434 KB)
  23 Oct 2014 73 views
- View All Technical Documents (8)

TIDA-00322 Board Image

Description

This TI reference design is an automotive Level/Concentration/Quality/Temp fluid measurement system. It is intended to use Ultrasonic measurement based on theC2000 and dual channel TDC1000 Ultrasonic AFE. This solution supports 4.5-40V system capabilities with reverse battery protection.

Fully assembled board (shown above) developed for testing and performance validation only, not available for sale.

Features

- Dual Channel Analog-front-end for ultrasonic sensing
- High voltage circuit to drive the transducer with 30V to penetrate deeper tanks
- Input voltage range of 6V to 40V with reverse battery protection
- Automotive qualified Bill of Material
- External RTD Measurement to monitor temperature changes that affect the medium's speed of sound
- CAN transceiver for flexibility of adding future CAN stack

TI's Standard Terms and Conditions for Evaluation Modules apply.

Schematic/Block Diagram

Quickly understand overall system functionality.

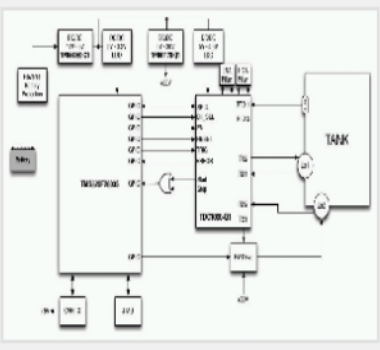

Download Schematic

Test Data

Get results faster with test and simulation data that's been verified.

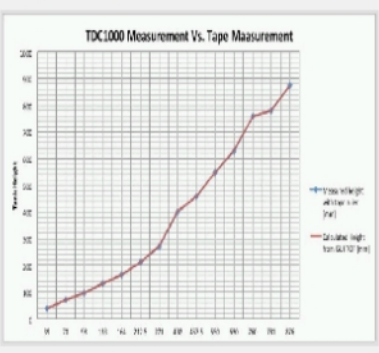

Download Test Data

Design Files

Download ready-to-use system files to speed your design process. Get Viewer.

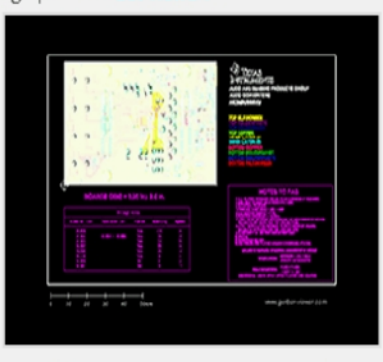

Download Design Files

Bill of Materials (BOM)

Find the complete list of components in this reference design.

Download BOM

TI Devices (7)

Order samples, get tools and find more information on the TI products in this reference design.

Part Number	Name	Product Family	Sample & Buy	Design Kits & Evaluation Modules
HVDA551-Q1	Automotive 5-V CAN Transceiver with I/O Level Adapting and Low-Power Mode Supply Optimization	Interface	Sample & Buy	Not Available
SN74LVC1G32-	Automotive Catalog Single 2-Input Positive-OR Gate	Logic	Sample & Buy	Not Available

Show More

CAD/CAE symbols

Part #	Package | Pins	CAD File (.bxl)	STEP Model (.stp)
SN74LVC1G32-Q1	SOT (DBV) | 5	Download	Download
	SOT (DCK) | 5	Download	Download
TMS320F28035	VQFN (RSH) | 56	Download	-
	TQFP (PAG) | 64	Download	Download
	LQFP (PN) | 80	Download	Download
TPS54260-Q1	HVSSOP (DGQ) | 10	Download	Download
TPS61170-Q1	WSON (DRV) | 6	Download	-
TPS79501-Q1	VSON (DRB) | 8	Download	-

Texas Instruments and Accelerated Designs Inc. have collaborated together to provide TI customers with schematic symbols and PCB layout footprints for TI products.

Step 1: Download and install the Ultra Librarian software ZIP: 62MB

Step 2: Download the Symbol and Footprint .bxl file.

- read more -

Technical Documents

User Guides (3)

Title	Abstract	Type	Size (KB)	Date	Views	TI Recommends
TIDA-00322 Design Considerations and BOM Analysis		PDF	434	23 Oct 2014	73	✓
TIDA-00322 Quick Start Guide		PDF	759	23 Oct 2014	100	✓
TIDA-00322 Test Results		PDF	1610	23 Oct 2014	42	

Design Files (5)

Title	Abstract	Type	Size (KB)	Date	Views
TIDA-00322 Gerber		ZIP	388	23 Oct 2014	10
TIDA-00322 CAD Files		ZIP	409	23 Oct 2014	14
TIDA-00322 Assembly Files		ZIP	236	23 Oct 2014	11
TIDA-00322 BOM		PDF	98	23 Oct 2014	29
TIDA-00322 Schematic and Block Diagram		PDF	205	23 Oct 2014	110

Related Tools & Software

Software (1)

TDC1000_C2000EVM GUI (TIDA-00322)
(ZIP, 161620 KB) 23 Oct 2014

Support & Community

TI E2E™ community

TI E2E™ Community

As a member of my.TI you can join the TI E2E™ Community where you can ask questions, share ideas and collaborate with fellow engineers and TI experts

Contents are provided "AS IS" by the respective TI and Community contributors and do not constitute TI specifications. See Terms of use.

Engage in the Community

- Amplifiers
- Broadband RF/IF & Digital Radio
- Clocks & Timers
- Data Converters
- DLP® & MEMS
- Interface
- Logic
- Power Management
- Wireless Connectivity

Wikis

Visit the TI Wiki

Other Support

- TI E2E Community
- Contact Technical Support

Your History

Products You Recently Viewed

- PMP10051
- TIDA-00213
- TIPD165
- PMP10415.3
- TIDA-00382

TI is a global semiconductor design and manufacturing company. Innovate with 100,000+ analog ICs and embedded processors, along with software, tools and the industry's largest sales/support staff.

© Copyright 1995-2014 Texas Instruments Incorporated. All rights reserved.
Trademarks | Privacy policy | Terms of use | Terms of sale

ecia MEMBER