Media Converter - RJ45 to Fiber Converter

(ACTIVE) TIDA-00306

Description & Features | Technical Documents | Support & Community | Order Now

View the Important Notice for TI Designs covering authorized use, intellectual property matters and disclaimers.

Key Document

- Copper-to-Fiber Ethernet Media Converter (TIDA-00306) (PDF 1647 KB)
  15 Sep 2014 45 views
- View All Technical Documents (6)

TIDA-00306 Media Converter Board Top View

View available purchase options for designs kits, evaluation modules and/or the bill of materials.

$199.00(USD)

Order Now

Description

This reference design details a methodology to use the DP83849 evaluation board to implement a 10/100BASE-TX to 10/100BASE-FX media converter, which enables copper based legacy equipment to be easily connected to a fiber network. Copper based Ethernet (10/100BASE-TX) has been widely used in grid local area networks, but with limited communication distance. Fiber optic networking has been well established and has continuous cost reductions. It is feasible and cost efficient for utility to use fiber optic networks to manage wide area equipment, which brings higher speed, longer coverage distance, and more reliable communication.

Features

- Low power consumption, < 600mW
- Stand-alone Media Converter without any software programming
- Strapping by using jumpers for ease of evaluation
- Can be extended for use as a Dual 10/100 Copper Ethernet interface
- Well suited for Mini-size 10/100BASE-TX to 100BASE-FX Media Converter
- Application note describes how to use DP83849IFVS-EVK to demo the Media Converter application

Schematic/Block Diagram

Quickly understand overall system functionality.

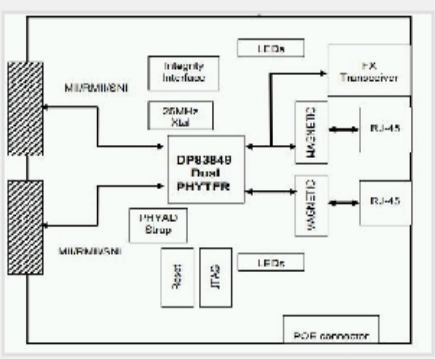

Download Schematic

Test Data

Get results faster with test and simulation data that's been verified.

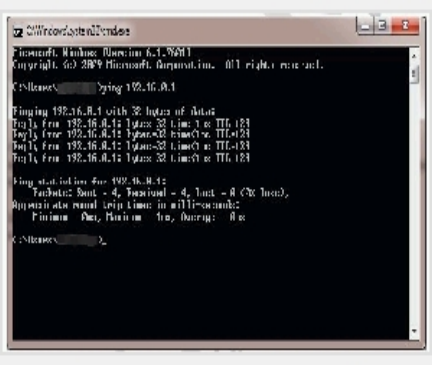

Download Test Data

Design Files

Download ready-to-use system files to speed your design process. Get Viewer.

Download Design Files

Bill of Materials (BOM)

Find the complete list of components in this reference design.

Download BOM

Order Now

Part Number	Buy from Texas Instruments or Third Party	Buy from Authorized Distributor	Status
DP83849IFVS-EVK/NOPB: DP83849IFVS Basic product evaluation and customer demo board with FX	$199.00(USD) In Stock Typically Ships in 1 to 3 Business Days Buy from TI	Pricing may vary. Buy from distributor	ACTIVE

Contact a Distributor | Texas | Go

TI's Standard Terms and Conditions for Evaluation Modules apply.

TI Devices (2)

Order samples, get tools and find more information on the TI products in this reference design.

Part Number	Name	Product Family	Sample & Buy	Design Kits & Evaluation Modules
DP83849I	PHYTER DUAL Ind Temp with Flexible Port Switching Dual Port 10/100 Mb/s Eth Phys Layer Transceiver	Ethernet	Sample & Buy	View Design Kits & Evaluation Modules
DP83849IF	PHYTER DUAL Ind Temp w/ Fiber Supp (FX) & Flex Port Switch Dual Port 10/100 Mb Eth Phys Layer Transc	Ethernet	Sample & Buy	View Design Kits & Evaluation Modules

CAD/CAE symbols

Part #	Package | Pins	CAD File (.bxl)	STEP Model (.stp)
DP83849I	TQFP (PFC) | 80	Download	Download
DP83849IF	TQFP (PFC) | 80	Download	Download

Texas Instruments and Accelerated Designs Inc. have collaborated together to provide TI customers with schematic symbols and PCB layout footprints for TI products.

Step 1: Download and install the Ultra Librarian software ZIP: 62MB

Step 2: Download the Symbol and Footprint .bxl file.

- read more -

Technical Documents

User Guides (1)

Title	Abstract	Type	Size (KB)	Date	Views	TI Recommends
Copper-to-Fiber Ethernet Media Converter (TIDA-00306)		PDF	1647	15 Sep 2014	45	✓

Design Files (5)

Title	Abstract	Type	Size (KB)	Date	Views
TIDA-00306 Gerber		ZIP	640	02 Oct 2014	8
TIDA-00306 CAD Files		ZIP	86	02 Oct 2014	13
TIDA-00306 BOM		PDF	75	02 Oct 2014	10
DP83849 EVK Layer Plots		PDF	455	23 Feb 2012	89
DP83849 Dual Phyter Demo II Stump Jumper Schematic and Block Diagram		PDF	155	21 Feb 2012	229

Support & Community

TI E2E™ community

TI E2E™ Community

As a member of my.TI you can join the TI E2E™ Community where you can ask questions, share ideas and collaborate with fellow engineers and TI experts

Contents are provided "AS IS" by the respective TI and Community contributors and do not constitute TI specifications. See Terms of use.

Engage in the Community

- Amplifiers
- Broadband RF/IF & Digital Radio
- Clocks & Timers
- Data Converters
- DLP® & MEMS
- Interface
- Logic
- Power Management
- Wireless Connectivity

Wikis

Visit the TI Wiki

Other Support

- TI E2E Community
- Contact Technical Support

Your History

Products You Recently Viewed

- PMP9751
- TIDM-LPBP-SPIPOTENTIOMETER
- TPS61040REF-001
- PMP9486
- PMP9311

TI is a global semiconductor design and manufacturing company. Innovate with 100,000+ analog ICs and embedded processors, along with software, tools and the industry's largest sales/support staff.

© Copyright 1995-2014 Texas Instruments Incorporated. All rights reserved.
Trademarks | Privacy policy | Terms of use | Terms of sale