Headset Detection Switch to Detect 3-Pole or 4-Pole 3.5mm Accessories

TIDesigns

(ACTIVE) TIDA-00006 No reviews yet. Add your review and give us feedback

Description & Features | Technical Documents | Support & Community | Order Now

View the Important Notice for TI Designs covering authorized use, intellectual property matters and disclaimers.

Description

This reference design is for **autonomous audio headset switch** applications. Some audio headsets have integrated analog microphones. The GND and MIC connections on the audio jack connector may be swapped depending on the manufacturer. This design has the ability to detect the **presence of an analog microphone** on the audio headset, **detect the pin configuration** of the MIC and Ground pins, and **switch the system MIC pin to the correct audio jack connector**. This allows the customer's audio solution to work seamlessly with headsets from all manufacturers.

Fully assembled board (shown above) developed for testing and performance validation only, not available for sale.

Features

- VDD range = 2.6V to 4.7V with Ground FET switches (60mΩ typ RON)
- Detection initiated by external trigger pin
- Supports FM signal transmission through the ground FETs
- Reduction of click/pop noise
- THD (Mic): 0.002% Typical
- 8-kV Contact Discharge (IEC 61000-4-2) ESD rating for Sleeve, Ring2 and Tip

TI's Standard Terms and Conditions for Evaluation Modules apply.

Schematic/Block Diagram

Quickly understand overall system functionality.

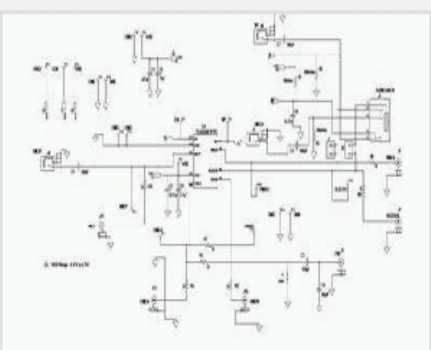

Download Schematic

Design Guide

Get results faster with test and simulation data that's been verified.

Download Design Guide

Design Files

Download ready-to-use system files to speed your design process. Get Viewer.

Download Design Files

Bill of Materials (BOM)

Find the complete list of components in this reference design.

Download BOM

TI Devices (1)

Order samples, get tools and find more information on the TI products in this reference design.

Part Number	Name	Product Family	Sample & Buy	Design Kits & Evaluation Modules
TS3A226AE	Autonomous Audio Headset Switch with Reduced GND Switch RON and FM Capability	Switches and Multiplexers	Sample & Buy	View Design Kits & Evaluation Modules

Technical Documents

User Guides (1)

Title	Abstract	Type	Size (KB)	Date	Views
TIDA-00006 Test Results		PDF	415	20 Aug 2013	94

Design Files (3)

Title	Abstract	Type	Size (KB)	Date	Views
TIDA-00006 Gerber		ZIP	374	20 Aug 2013	57
TIDA-00006 BOM		PDF	194	20 Aug 2013	71
TIDA-00006 Schematic		PDF	61	20 Aug 2013	144

Applications

- AV Receiver
- Audio Dock: Basic
- Audio Dock: Performance
- Audio Dock: Portable
- Digital Radio
- MP3 Player & Recorder (Portable Audio)

Support & Community

TI E2E™ community

TI E2E™ Community

As a member of my.TI you can join the TI E2E™ Community where you can ask questions, share ideas and collaborate with fellow engineers and TI experts

Contents are provided "AS IS" by the respective TI and Community contributors and do not constitute TI specifications. See Terms of use.

Engage in the Community

- Amplifiers
- Broadband RF/IF & Digital Radio
- Clocks & Timers
- Data Converters
- DLP® & MEMS
- Interface
- Logic
- Power Management
- Wireless Connectivity

Wikis

Visit the TI Wiki

Other Support

- TI E2E Community
- Contact Technical Support

Customer Reviews BETA

No reviews yet. Add your review and give us feedback

Your History

Products You Recently Viewed

- lm3424bkbsteval
- tps2115aevm-581
- sn65lvds250evm
- lm3423bs2lyev
- sn65lvcp22-23evm

TI is a global semiconductor design and manufacturing company. Innovate with 100,000+ analog ICs and embedded processors, along with software, tools and the industry's largest sales/support staff.

© Copyright 1995-2014 Texas Instruments Incorporated. All rights reserved.
Trademarks | Privacy policy | Terms of use | Terms of sale