Low Power Fully Differential Programmable Gain Amplifier Reference Design

(ACTIVE) TIDA-00025 No reviews yet. Add your review and give us feedback

Description & Features | Technical Documents | Support & Community | Order Now

View the Important Notice for TI Designs covering authorized use, intellectual property matters and disclaimers.

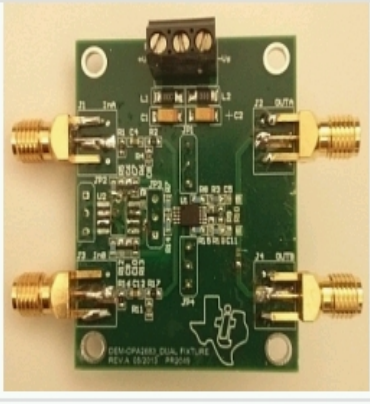

TIDA-00025 Top View

Fully assembled board (shown above) developed for testing and performance validation only, not available for sale.

Description

Reference Design for a Low Power Fully Differential Programmable Gain Amplifier using the TI OPA2683 Low Power Dual Current Feedback Amplifier. This design guide reviews some of the design challenges necessary to create such a circuit. The design guide reviews the results and provides some recommendations for using/designing a Low Power FDA PGA.

Features

- Low Power Fully Differential Amplifier
- Low Power Programmable Gain Amplifier
- Wide Bandwidth Relative to High Gain
- +/-5V supply voltage
- Gains of 2, 21, 50, and 70 V/V
- This reference design has been lab tested and is supported with design files and a design guide

TI's Standard Terms and Conditions for Evaluation Modules apply.

Schematic/Block Diagram

Quickly understand overall system functionality.

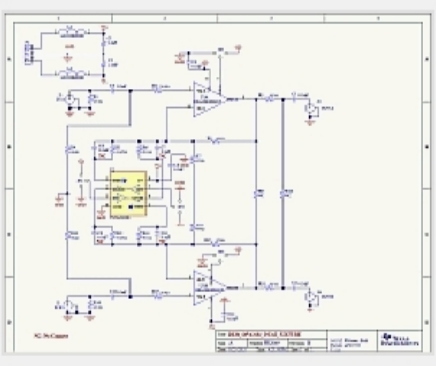

Download Schematic

Test Data

Get results faster with test and simulation data that's been verified.

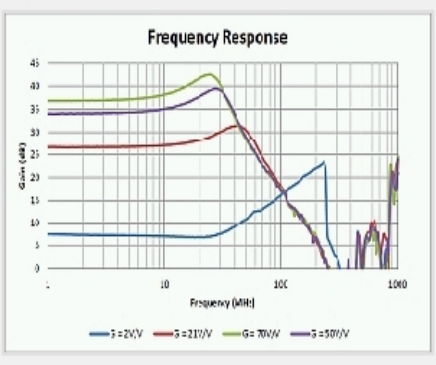

Download Test Data

Design Files

Download ready-to-use system files to speed your design process. Get Viewer.

Download Design Files

Bill of Materials (BOM)

Find the complete list of components in this reference design.

Download BOM

TI Devices (2)

Order samples, get tools and find more information on the TI products in this reference design.

Part Number	Name	Product Family	Sample & Buy	Design Kits & Evaluation Modules
OPA2683	Very Low Power, Dual Current Feedback Operational Amplifier	Operational Amplifier (Op Amp)	Sample & Buy	View Design Kits & Evaluation Modules
TS5A23166	0.9-Ohm Dual SPST Analog Switch 5-V/3.3-V 2-Channel Analog Switch	Analog Switch	Sample & Buy	Not Available

CAD/CAE symbols

Part #	Package | Pins	CAD File (.bxl)	STEP Model (.stp)
OPA2683	SOIC (D) | 8	Download	Download
	SOT (DCN) | 8	Download	-
	VSSOP (DGS) | 10	Download	Download
TS5A23166	SSOP (DCT) | 8	Download	-
	VSSOP (DCU) | 8	Download	-
	DSBGA (YZP) | 8	Download	-
	DSBGA (YZT) | 8	Download	-

Texas Instruments and Accelerated Designs Inc. have collaborated together to provide TI customers with schematic symbols and PCB layout footprints for TI products.

Step 1: Download and install the Ultra Librarian software ZIP: 62MB

Step 2: Download the Symbol and Footprint .bxl file.

- read more -

Technical Documents

User Guides (1)

Title	Abstract	Type	Size (KB)	Date	Views
TIDA-00025 Design Guide		PDF	481	27 Aug 2013	97

Design Files (3)

Title	Abstract	Type	Size (KB)	Date	Views
TIDA-00025 Gerber		ZIP	53	27 Aug 2013	51
TIDA-00025 BOM		PDF	99	27 Aug 2013	38
TIDA-00025 Schematic		PDF	95	27 Aug 2013	152

Applications

- Oscilloscope
- Signal/Waveform Generator
- Vector Signal Analyzer
- Vector Signal Generator
- Wireless Communications Tester

Support & Community

TI E2E™ community

TI E2E™ Community

As a member of my.TI you can join the TI E2E™ Community where you can ask questions, share ideas and collaborate with fellow engineers and TI experts

Contents are provided "AS IS" by the respective TI and Community contributors and do not constitute TI specifications. See Terms of use.

Engage in the Community

- Amplifiers
- Broadband RF/IF & Digital Radio
- Clocks & Timers
- Data Converters
- DLP® & MEMS
- Interface
- Logic
- Power Management
- Wireless Connectivity

Wikis

Visit the TI Wiki

Other Support

- TI E2E Community
- Contact Technical Support

Customer Reviews BETA

No reviews yet. Add your review and give us feedback

Your History

Products You Recently Viewed

- ths4271evm
- ads1118evm
- pcm4204evm
- opa2836idgsevm
- afe5805evm

TI is a global semiconductor design and manufacturing company. Innovate with 100,000+ analog ICs and embedded processors, along with software, tools and the industry's largest sales/support staff.

© Copyright 1995-2014 Texas Instruments Incorporated. All rights reserved.
Trademarks | Privacy policy | Terms of use | Terms of sale