High Density 30W DC-DC Buck Converter with the Inductor Mounted Over the Converter to Save Space

TIDesigns

(ACTIVE) PMP10364

Description & Features | Technical Documents | Support & Community | Order Now

View the Important Notice for TI Designs covering authorized use, intellectual property matters and disclaimers.

High Density 30W DC-DC Buck Converter with the Inductor Mounted Over the Converter to Save Space Reference Design (top view)

Description

This design has inductor over converter to achieve 30 A conversion in 1" by 0.6" (2.5 cm by 1.5 cm) footprint. The DCAP control of the controller provides a high speed control loop which is needed for applications with large rapidly varying loads, such as microprocessors. A high speed dynamic load is also included to verify this capability.

Features

- Fully synchronous controller for lowest losses
- DCAP2 control for excellent step load response
- Compact design with inductor over controller
- Thermal performance well documented both with & without fan
- On board high speed dynamic test load to verify dynamic performance
- Schematic, BOM, layout and Test Report focusing on thermal performance & load dynamics

Fully assembled board (shown above) developed for testing and performance validation only, not available for sale.

TI's Standard Terms and Conditions for Evaluation Modules apply.

Schematic/Block Diagram

Quickly understand overall system functionality.

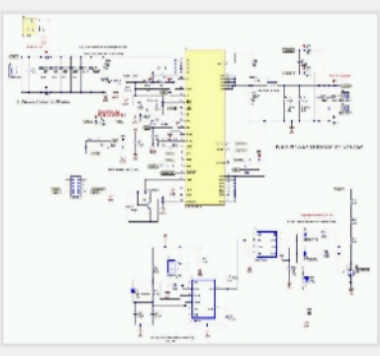

Download Schematic

Test Data

Get results faster with test and simulation data that's been verified.

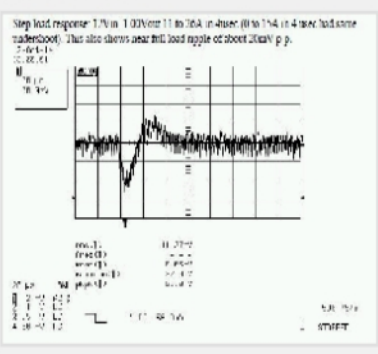

Download Test Data

Design Files

Download ready-to-use system files to speed your design process. Get Viewer.

Download Design Files

Bill of Materials (BOM)

Find the complete list of components in this reference design.

Download BOM

Parametrics

	PMP10364
Vin (Max) (V)	13.2
Vin (Min) (V)	10.8
Vout (Nom) (V)	1
Iout (Max) (A)	30
Output Power	30
Isolated/Non-Isolated	Non-Isolated
Input Type	DC
Topology	Buck- Integrated Switch Buck- Synchronous

TI Devices (1)

Order samples, get tools and find more information on the TI products in this reference design.

Part Number	Name	Product Family	Sample & Buy	Design Kits & Evaluation Modules
TPS544C20	4.5-18V 30A SWIFT™ with PMBus™ Programmability and Voltage, Current and Temp Monitoring	Converter (Integrated Switch)	Sample & Buy	View Design Kits & Evaluation Modules

CAD/CAE symbols

Part #	Package | Pins	CAD File (.bxl)	STEP Model (.stp)
TPS544C20	LQFN-CLIP (RVF) | 40	Download	-

Texas Instruments and Accelerated Designs Inc. have collaborated together to provide TI customers with schematic symbols and PCB layout footprints for TI products.

Step 1: Download and install the Ultra Librarian software ZIP: 62MB

Step 2: Download the Symbol and Footprint .bxl file.

- read more -

Technical Documents

User Guides (1)

Title	Abstract	Type	Size (KB)	Date	Views
PMP10364 Test Results		PDF	420	01 Dec 2014	39

Design Files (5)

Title	Abstract	Type	Size (KB)	Date	Views
PMP10364 Gerber		ZIP	283	01 Dec 2014	12
PMP10364 PCB		PDF	1546	01 Dec 2014	15
PMP10364 Assembly Drawing		PDF	165	01 Dec 2014	12
PMP10364 BOM		PDF	128	01 Dec 2014	32
PMP10364 Schematic		PDF	172	01 Dec 2014	61

Support & Community

TI E2E™ community

TI E2E™ Community

As a member of my.TI you can join the TI E2E™ Community where you can ask questions, share ideas and collaborate with fellow engineers and TI experts

Contents are provided "AS IS" by the respective TI and Community contributors and do not constitute TI specifications. See Terms of use.

Engage in the Community

- Amplifiers
- Broadband RF/IF & Digital Radio
- Clocks & Timers
- Data Converters
- DLP® & MEMS
- Interface
- Logic
- Power Management
- Wireless Connectivity

Wikis

Visit the TI Wiki

Training & events

Name	Type	Available During
SimpleLink™ Wi-Fi CC3100 and CC3200 Project 0 Series - 5 Part Series Learn about using Software Tools for SimpleLink™ Wi-Fi CC3100 Boosterpack and CC3200 Launchpad	On-Line Training	On Demand
TI-RTOS Update Learn about the latest TI-RTOS features and more in-depth understanding of this TI software tool.	On-Line Training	On Demand
Designing with Ultra Low Power Segmented Displays Learn about designing Ultra-low Power Segmented Displays and MSP430	On-Line Training	On Demand

See more training & events

Other Support

- TI E2E Community
- Contact Technical Support

Your History

Products You Recently Viewed

- msp-exp430fr4133
- LAUNCHXL2-TMS57012
- tmdx570ls12hdk
- launchxl2-rm46
- LAUNCHXL2-RM46

TI is a global semiconductor design and manufacturing company. Innovate with 100,000+ analog ICs and embedded processors, along with software, tools and the industry's largest sales/support staff.

© Copyright 1995-2014 Texas Instruments Incorporated. All rights reserved.
Trademarks | Privacy policy | Terms of use | Terms of sale