85 to 265VAC Input 12V@3A High Efficiency Adapator Reference Design

TIDesigns

(ACTIVE) PMP9715

Description & Features | Technical Documents | Support & Community | Order Now

View the Important Notice for TI Designs covering authorized use, intellectual property matters and disclaimers.

Description

This reference design provides an isolated 12V/36W output from a universal AC input range with over 89% peak efficiency. The UCC24610 synchronous rectifier controller and CSD19531Q5A FET reduce the rectifier loss and provide high efficiency with a minimal increase in cost. The UCC28740 flyback controller uses a combination of peak current modulation and frequency modulation to maintain excellent efficiency at lighter loads and minimize no load power consumption. The current regulation feature of the UCC28740 provides accurate current limit protection. This compact design consumes a volume of only 2.0" x 2.0" x 0.75".

85 to 265VAC Input 12V@3A High Efficiency Adapator Reference Design - top view

Features

- Compact AC/DC adaptor design (2.0" x 2.0" x 0.75")
- Synchronous rectification for high efficiency (>89% peak, 88.7% average)
- Accurate current limiting
- Consumes less than 150mW power at no load to qualify for 4-star EC IPP Mobile device charger rating
- Less than 150ms start-up time at full-load

Fully assembled board (shown above) developed for testing and performance validation only, not available for sale.

TI's Standard Terms and Conditions for Evaluation Modules apply.

Schematic/Block Diagram

Quickly understand overall system functionality.

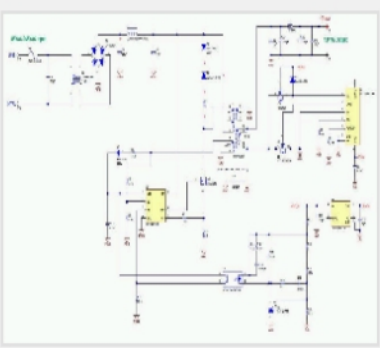

Download Schematic

Test Data

Get results faster with test and simulation data that's been verified.

Vin	Pin	Vout	Iout	Load	Efficiency	Avg. Eff.
115VAC/60Hz	10.15	12.10	0.750	25%	89.41%	88.74%
	20.46	12.10	1.500	50%	88.71%	
	30.78	12.10	2.251	75%	88.49%	
	41.08	12.10	3.000	100%	88.36%	
230VAC/50Hz	10.28	12.10	0.750	25%	88.28%	88.89%
	20.41	12.10	1.499	50%	88.87%	
	30.55	12.10	2.250	75%	89.12%	
	40.68	12.10	3.001	100%	89.31%	

Download Test Data

Design Files

Download ready-to-use system files to speed your design process. Get Viewer.

Download Design Files

Bill of Materials (BOM)

Find the complete list of components in this reference design.

Download BOM

Parametrics

	PMP9715
Vin (Min) (V)	85
Vin (Max) (V)	265
Vout (Nom) (V)	12
Iout (Max) (A)	3
Output Power	36
Isolated/Non-Isolated	Isolated
Input Type	AC
Topology	Flyback- DCM Flyback- Quasi Resonant Flyback- Synchronous

TI Devices (5)

Order samples, get tools and find more information on the TI products in this reference design.

Part Number	Name	Product Family	Sample & Buy	Design Kits & Evaluation Modules
CSD19531Q5A	100V, 5.3mOhm, SON5x6 NexFET™ Power MOSFET	Power MOSFET	Sample & Buy	Not Available
TL431A	Adjustable Precision Shunt Regulator	Voltage Reference	Sample & Buy	Not Available
TPS71550	Single Output LDO, 50mA, Fixed(5.0V), High Input Voltage, Low Quiescent Current	Linear Regulator (LDO)	Sample & Buy	View Design Kits & Evaluation Modules
UCC24610	Secondary Side Synchronous Rectifier Controller	AC/DC and Isolated DC/DC Power Supply	Sample & Buy	View Design Kits & Evaluation Modules
UCC28740	Constant-Voltage, Constant-Current Flyback Controller Using Opto-Coupler Feedback	AC/DC and Isolated DC/DC Power Supply	Sample & Buy	View Design Kits & Evaluation Modules

Show More

CAD/CAE symbols

Part #	Package | Pins	CAD File (.bxl)	STEP Model (.stp)
TL431A	SOT (DBZ) | 3	Download	Download
	TO-92 (LP) | 3	Download	Download
	SIP (PK) | 3	Download	-
	SOT (DBV) | 5	Download	Download
	SOT (DCK) | 6	Download	Download
	SOIC (D) | 8	Download	Download
	PDIP (P) | 8	Download	Download
	SOP (PS) | 8	Download	-
	TSSOP (PW) | 8	Download	-
TPS71550	SOT (DCK) | 5	Download	Download
UCC24610	SOIC (D) | 8	Download	Download
	VSON (DRB) | 8	Download	-

Texas Instruments and Accelerated Designs Inc. have collaborated together to provide TI customers with schematic symbols and PCB layout footprints for TI products.

Step 1: Download and install the Ultra Librarian software ZIP: 62MB

Step 2: Download the Symbol and Footprint .bxl file.

- read more -

Technical Documents

User Guides (1)

Title	Abstract	Type	Size (KB)	Date	Views
PMP9715 Test Results		PDF	4360	10 Dec 2014	16

Design Files (5)

Title	Abstract	Type	Size (KB)	Date	Views
PMP9715 Gerber		ZIP	193	10 Dec 2014	7
PMP9715 PCB		PDF	234	10 Dec 2014	20
PMP9715 Assembly Drawing		PDF	66	10 Dec 2014	18
PMP9715 BOM		PDF	84	10 Dec 2014	21
PMP9715 Schematic		PDF	125	10 Dec 2014	52

Applications

- Notebook PC

Support & Community

TI E2E™ community

TI E2E™ Community

As a member of my.TI you can join the TI E2E™ Community where you can ask questions, share ideas and collaborate with fellow engineers and TI experts

Contents are provided "AS IS" by the respective TI and Community contributors and do not constitute TI specifications. See Terms of use.

Engage in the Community

- Amplifiers
- Broadband RF/IF & Digital Radio
- Clocks & Timers
- Data Converters
- DLP® & MEMS
- Interface
- Logic
- Power Management
- Wireless Connectivity

Wikis

Visit the TI Wiki

Training & events

Name	Type	Available During
SimpleLink™ Wi-Fi CC3100 and CC3200 Project 0 Series - 5 Part Series Learn about using Software Tools for SimpleLink™ Wi-Fi CC3100 Boosterpack and CC3200 Launchpad	On-Line Training	On Demand
TI-RTOS Update Learn about the latest TI-RTOS features and more in-depth understanding of this TI software tool.	On-Line Training	On Demand
Designing with Ultra Low Power Segmented Displays Learn about designing Ultra-low Power Segmented Displays and MSP430	On-Line Training	On Demand

See more training & events

Other Support

- TI E2E Community
- Contact Technical Support

Your History

Products You Recently Viewed

- PMP4440
- PMP9649
- PMP10531.3
- PMP10531.2
- PMP10531.1

TI is a global semiconductor design and manufacturing company. Innovate with 100,000+ analog ICs and embedded processors, along with software, tools and the industry's largest sales/support staff.

© Copyright 1995-2014 Texas Instruments Incorporated. All rights reserved.
Trademarks | Privacy policy | Terms of use | Terms of sale