Small Automotive High Input Voltage 3W Isolated Flyback, 50V...600Vin to 15V@200mA Reference Design

TIDesigns

(ACTIVE) PMP8688

Description & Features | Technical Documents | Support & Community | Order Now

View the Important Notice for TI Designs covering authorized use, intellectual property matters and disclaimers.

Description

This simple isolated flyback converts 50V...600Vin to 15V@200mA. The LM5021-1 controller is suitable for green mode converters due to pulse skip mode. Since the input maximum voltage is 600V, the pulse skip mode improves the efficiency due to the reduction of the switching losses.

Features

- Wide Vin capability (50 to 600V DC)
- Duty cycle restriction to 80%
- 84% full load efficiency
- Less than 70mW consumed at no load
- Pulse skipping mode resulting in reduction of switching losses
- Low component count (as there is no need for external slope compensation) with LM5021-1

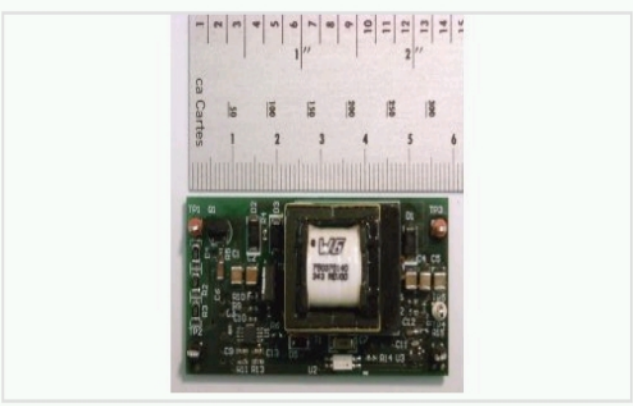

Small Automotive High Input Voltage 3W Isolated Flyback, 50V...600Vin to 15V@200mA Reference Design (top view)

Fully assembled board (shown above) developed for testing and performance validation only, not available for sale.

TI's Standard Terms and Conditions for Evaluation Modules apply.

Schematic/Block Diagram

Quickly understand overall system functionality.

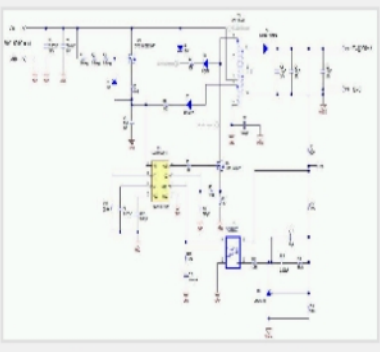

Download Schematic

Test Data

Get results faster with test and simulation data that's been verified.

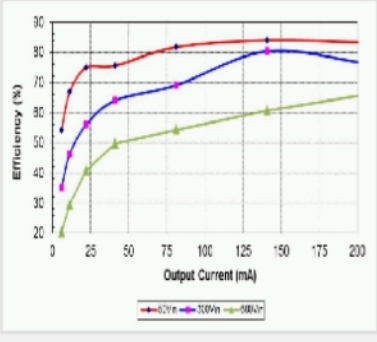

Download Test Data

Design Files

Download ready-to-use system files to speed your design process. Get Viewer.

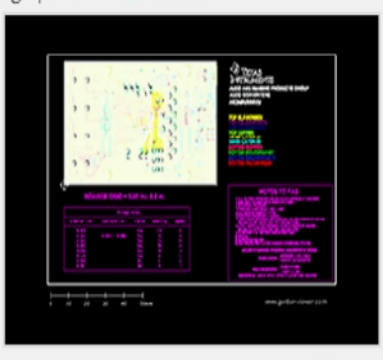

Download Design Files

Bill of Materials (BOM)

Find the complete list of components in this reference design.

Download BOM

Parametrics

	PMP8688
Vin (Max) (V)	600
Vin (Min) (V)	50
Vout (Nom) (V)	15
Iout (Max) (A)	.2
Output Power	3
Isolated/Non-Isolated	Isolated
Input Type	DC
Topology	Flyback- Non Sync

TI Devices (1)

Order samples, get tools and find more information on the TI products in this reference design.

Part Number	Name	Product Family	Sample & Buy	Design Kits & Evaluation Modules
LM5021	8-30V, Current Mode AC-DC PWM Boost Controller	Controller (External Switch)	Sample & Buy	Not Available

CAD/CAE symbols

Part #	Package | Pins	CAD File (.bxl)	STEP Model (.stp)
LM5021	VSSOP (DGK) | 8	Download	Download
	PDIP (P) | 8	Download	Download

Texas Instruments and Accelerated Designs Inc. have collaborated together to provide TI customers with schematic symbols and PCB layout footprints for TI products.

Step 1: Download and install the Ultra Librarian software ZIP: 62MB

Step 2: Download the Symbol and Footprint .bxl file.

- read more -

Technical Documents

User Guides (1)

Title	Abstract	Type	Size (KB)	Date	Views
PMP8688 Test Results		PDF	549	18 Apr 2014	15

Design Files (3)

Title	Abstract	Type	Size (KB)	Date	Views
PMP8688 Gerber		ZIP	47	09 Dec 2014	13
PMP8688 BOM		PDF	36	18 Apr 2014	18
PMP8688 Schematic		PDF	177	18 Apr 2014	37

Support & Community

TI E2E™ community

TI E2E™ Community

As a member of my.TI you can join the TI E2E™ Community where you can ask questions, share ideas and collaborate with fellow engineers and TI experts

Contents are provided "AS IS" by the respective TI and Community contributors and do not constitute TI specifications. See Terms of use.

Engage in the Community

- Amplifiers
- Broadband RF/IF & Digital Radio
- Clocks & Timers
- Data Converters
- DLP® & MEMS
- Interface
- Logic
- Power Management
- Wireless Connectivity

Wikis

Visit the TI Wiki

Training & events

Name	Type	Available During
SimpleLink™ Wi-Fi CC3100 and CC3200 Project 0 Series - 5 Part Series Learn about using Software Tools for SimpleLink™ Wi-Fi CC3100 Boosterpack and CC3200 Launchpad	On-Line Training	On Demand
TI-RTOS Update Learn about the latest TI-RTOS features and more in-depth understanding of this TI software tool.	On-Line Training	On Demand
Designing with Ultra Low Power Segmented Displays Learn about designing Ultra-low Power Segmented Displays and MSP430	On-Line Training	On Demand

See more training & events

Other Support

- TI E2E Community
- Contact Technical Support

Your History

Products You Recently Viewed

- PMP9715
- PMP4440
- PMP9649
- PMP10531.3
- PMP10531.2

TI is a global semiconductor design and manufacturing company. Innovate with 100,000+ analog ICs and embedded processors, along with software, tools and the industry's largest sales/support staff.

© Copyright 1995-2014 Texas Instruments Incorporated. All rights reserved.
Trademarks | Privacy policy | Terms of use | Terms of sale