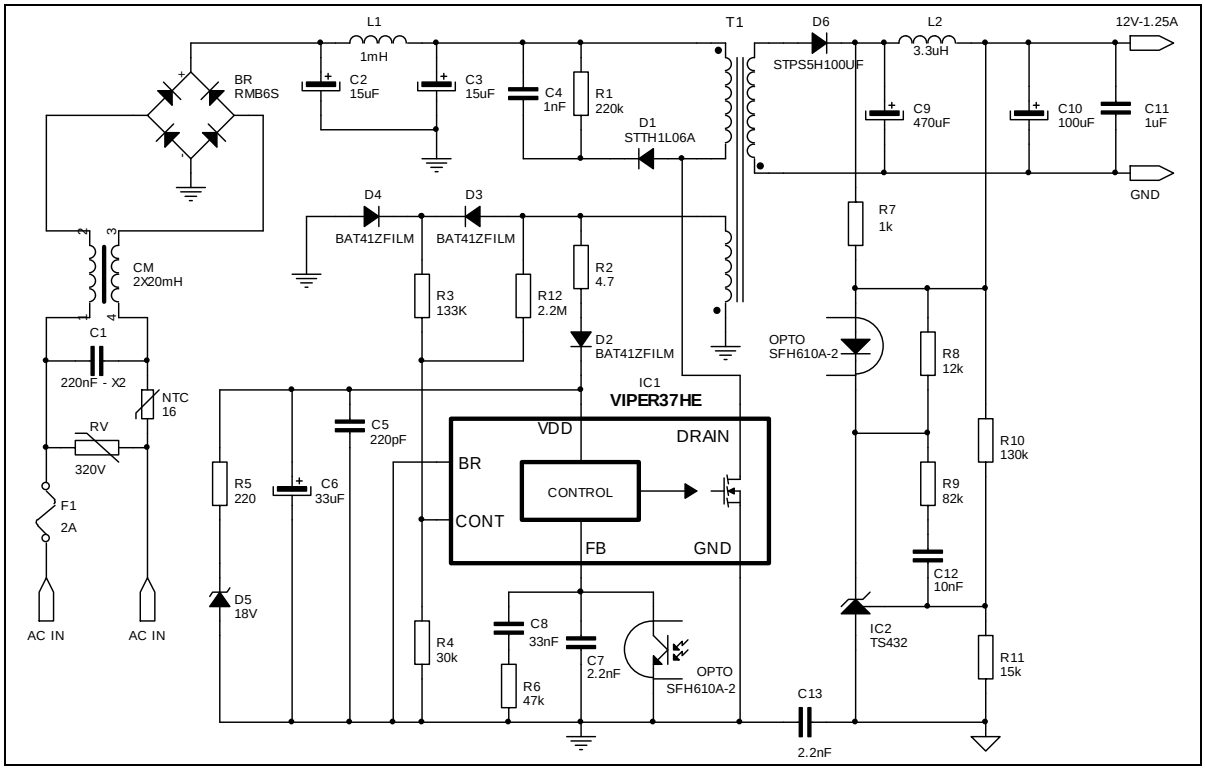STEVAL-ISA140V1 Electrical schematic