# Power and Serializer Reference Design for Automotive Camera Module

(PREVIEW) PMP9351

Description & Features | Technical Documents | Support & Community | Order Now

View the Important Notice for TI Designs covering authorized use, intellectual property matters and disclaimers.

PMP9351 Evaluation Module Automotive Backup Camera Omnivision Power Serializer FPD-Link III

## Description

The PMP9351 is a compact power and serializer solution for automotive backup camera module using OmniVision image sensor OV10635. The reference board with two LMR22007 sync buck regulator provides two 3.3V and one 1.5V outputs to power the OV10635 eval board bypassing the on-board LDOs. The design takes 20x20mm effective PCB board area. The system input voltage is 9V nominal from an ECU, and the input range is from 5.5V to 20V. The reference board includes the DS90UB913Q serializer and supports power-over-coax configuration allowing input power and FPD-Link III signals transferring over a single coax cable.

## Features

- Power and serializer solution designed for OmniVision OV10635 image sensor in automotive camera
- Compact solution size, with 20x20mm board area
- 3.3V and 1.5V outputs with output filter to cover the I/O, core, analog rails and ensure high image quality
- 5.5V to 20V operating input voltage range, 9V nominal input from ECU
- Power-over-coax configuration, coupling input power and FPD-Link III signal on one coaxial cable
- Compatible connector to OV10635 EVM with minor board modifications

Fully assembled board (shown above) developed for testing and performance validation only, not available for sale.

## Schematic/Block Diagram

Quickly understand overall system functionality.

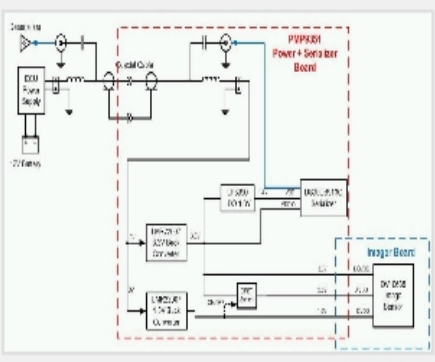

Download Schematic

## Test Data

Get results faster with test and simulation data that's been verified.

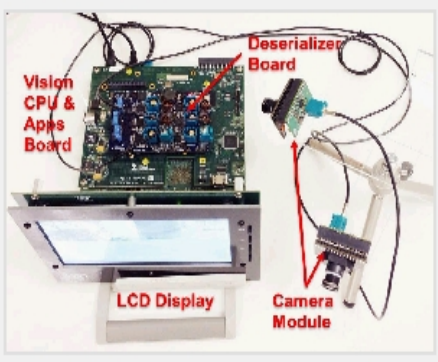


Download Test Data

## Design Files

Download ready-to-use system files to speed your design process. Get Viewer.

Download Design File

## Bill of Materials (BOM)

Find the complete list of components in this reference design.

Download BOM

## TI Devices (3)

Order samples, get tools and find more information on the TI products in this reference design.

| Part Number | Name | Product Family | Sample & Buy | Design Kits & Evaluation Modules |
|---|---|---|---|---|
| DS90UB913Q-Q1 | DS90UB913Q/4Q 10-100MHz 10/12-Bit FPD-Link III SER/DES | Display & Imaging Interface | Not Available | View Design Kits & Evaluation Modules |
| LMR22007 | SIMPLE SWITCHER® Nano Regulator 2.7-20Vin, 750mA Synchronous Step-Down Converter | Converter (Integrated Switch) | Sample & Buy | View Design Kits & Evaluation Modules |
| LP3990 | 150mA Linear Voltage Regulator for Digital Applications | Linear Regulator (LDO) | Sample & Buy | Not Available |

## CAD/CAE symbols

| Part # | Package \| Pins | CAD File (.bxl) | STEP Model (.stp) |
|---|---|---|---|
| LP3990 | DSBGA (YZR) \| 4 | Download | - |
| | SOT (DBV) \| 5 | Download | Download |
| | WSON (NGG) \| 6 | Download | Download |

Texas Instruments and Accelerated Designs Inc. have collaborated together to provide TI customers with schematic symbols and PCB layout footprints for TI products.

Step 1: Download and install the Ultra Librarian software ZIP: 62MB

Step 2: Download the Symbol and Footprint .bxl file.

- read more -

## Technical Documents

### User Guides (1)

| Title | Abstract | Type | Size (KB) | Date | Views |
|---|---|---|---|---|---|
| PMP9351 Test Results | | PDF | 746 | 13 Feb 2014 | 724 |

### Design Files (3)

| Title | Abstract | Type | Size (KB) | Date | Views |
|---|---|---|---|---|---|
| PMP9351 Gerber | | ZIP | 193 | 13 Feb 2014 | 891 |
| PMP9351 BOM | | PDF | 48 | 13 Feb 2014 | 496 |
| PMP9351 Schematic | | PDF | 275 | 13 Feb 2014 | 900 |

## Support & Community

### TI E2E™ community

TI E2E™ Community

As a member of my.TI you can join the TI E2E™ Community where you can ask questions, share ideas and collaborate with fellow engineers and TI experts

Contents are provided "AS IS" by the respective TI and Community contributors and do not constitute TI specifications. See Terms of use.

Engage in the Community

- Amplifiers
- Broadband RF/IF & Digital Radio
- Clocks & Timers
- Data Converters
- DLP® & MEMS
- Interface
- Logic
- Power Management
- Wireless Connectivity

### Wikis

Visit the TI Wiki

### Other Support

- TI E2E Community
- Contact Technical Support

### Your History

Products You Recently Viewed

- PMP5471
- PMP5098
- TIDA-00258
- TIDA-00242
- TIDA-00160



TI is a global semiconductor design and manufacturing company. Innovate with 100,000+ analog ICs and embedded processors, along with software, tools and the industry's largest sales/support staff.

© Copyright 1995-2014 Texas Instruments Incorporated. All rights reserved.
Trademarks | Privacy policy | Terms of use | Terms of sale