CISPR 25 Class 5 Rated 1.5W Automotive Power Reference Design

(ACTIVE) PMP9361

Description & Features | Technical Documents | Support & Community

View the Important Notice for TI Designs covering authorized use, intellectual property matters and disclaimers.

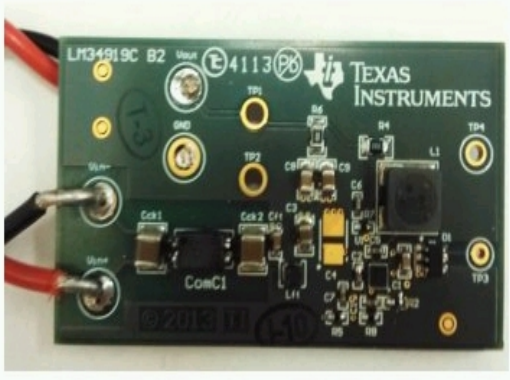

CISPR 25 class 5 rated 1.5W Automotive power design (front)

Description

The PMP9361 reference design provides an EMI optimized 1.5W power supply design for automotive applications. This design features the LM34919C, a 50V, 600mA buck regulator, AEC-Q100 qualified, with a switching frequency up to 2.6MHz and in ultra-small 2x2mm DSBGA package, making it suitable for automotive applications. The power supply generates a 3.3V output at 500mA, and the switching frequency is set at 2.1MHz to avoid AM bands interferences. The design comes with the input EMI filter to suppress the conducted emissions. It is tested under the CISPR 25, the automotive EMC standard, and the result is compliant with the Class 5 conducted emissions standard.

Features

- CISPR 25 Class 5 conducted emissions standard compliance
- LM34919C-Q1, 50V, 600mA Constant On-Time Buck Regulator, ultra-small 2x2mm DSBGA package, AEC-Q100 qualified
- 6-50V operating input voltage range
- 2.1MHz switching frequency to avoid AM band, and input EMI filter to suppress conducted emissions
- Optimized layout for better EMI performance
- 1.5W power supply design, ideal for 12V automotive battery system

Fully assembled board (shown above) developed for testing and performance validation only, not available for sale.

Schematic/Block Diagram

Quickly understand overall system functionality.

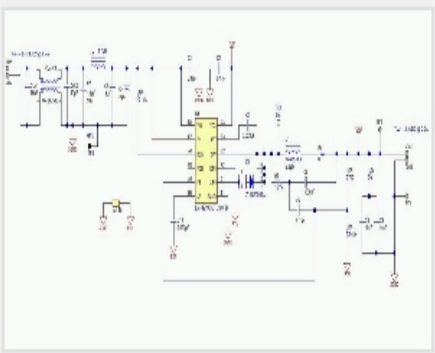

Download Schematic

Test Data

Get results faster with test and simulation data that's been verified.

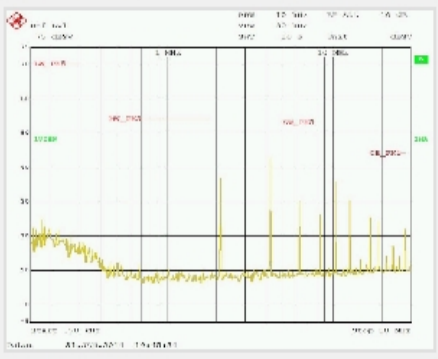

Download Test Data

Design Files

Download ready-to-use system files to speed your design process. Get Viewer.

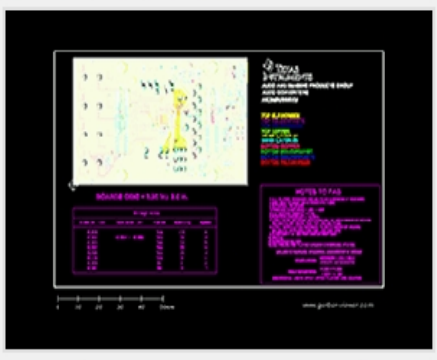

Download Design File

Bill of Materials (BOM)

Find the complete list of components in this reference design.

Download BOM

Technical Documents

User Guides (1)

Title	Abstract	Type	Size (KB)	Date	Views
PMP9361 Test Results		PDF	451	01 Apr 2014	524

Design Files (4)

Title	Abstract	Type	Size (KB)	Date	Views
PMP9361 Gerber		ZIP	50	01 Apr 2014	635
PMP9361 PCB		PDF	1099	01 Apr 2014	543
PMP9361 BOM		PDF	118	01 Apr 2014	393
PMP9361 Schematic		PDF	154	01 Apr 2014	562

Support & Community

TI E2E™ community

TI E2E™ Community

As a member of my.TI you can join the TI E2E™ Community where you can ask questions, share ideas and collaborate with fellow engineers and TI experts

Contents are provided "AS IS" by the respective TI and Community contributors and do not constitute TI specifications. See Terms of use.

Engage in the Community

- Amplifiers
- Broadband RF/IF & Digital Radio
- Clocks & Timers
- Data Converters
- DLP® & MEMS
- Interface
- Logic
- Power Management
- Wireless Connectivity

Wikis

Visit the TI Wiki

Other Support

- TI E2E Community
- Contact Technical Support

Your History

Products You Recently Viewed

- PMP9351
- PMP5471
- PMP5098
- TIDA-00258
- TIDA-00242

TI is a global semiconductor design and manufacturing company. Innovate with 100,000+ analog ICs and embedded processors, along with software, tools and the industry's largest sales/support staff.

© Copyright 1995-2014 Texas Instruments Incorporated. All rights reserved.
Trademarks | Privacy policy | Terms of use | Terms of sale