24V Offline Flyback Power Supply for Industrial Rails Reference Design

(ACTIVE) PMP9643

Description & Features | Technical Documents | Support & Community | Order Now

View the Important Notice for TI Designs covering authorized use, intellectual property matters and disclaimers.

Evaluation Board: 24V Offline Flyback Power Supply for Industrial Rails

Fully assembled board (shown above) developed for testing and performance validation only, not available for sale.

Description

24V Output, Constant Voltage / Constant Current, 65W Flyback power supply with 130W surge capability. Primary side regulation eliminates feedback opto-coupler and provides 1% regulation down to no-load. Average efficiency of > 89% and no load power of < 70mW are achieved. Voltage input range is 85VAC-265VAC Input.

Features

- Primary Side Regulation (PSR)
- +/- 1% Voltage Regulation
- +/- 7.5% Current Regulation
- <70mW Stand-by Power
- Short Circuit Protection
- High Voltage Startup
- > 85% Efficiency at 10% load

Schematic/Block Diagram

Quickly understand overall system functionality.

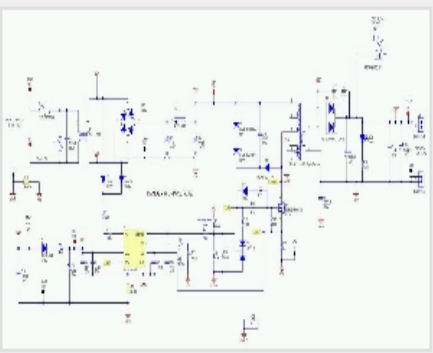

Download Schematic

Test Data

Get results faster with test and simulation data that's been verified.

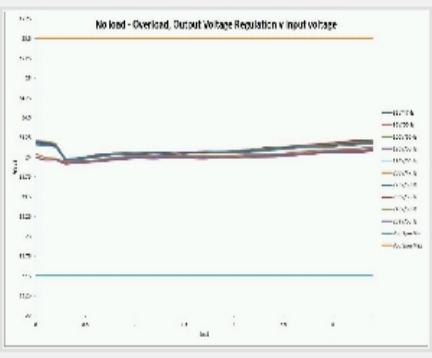

Download Test Data

Design Files

Download ready-to-use system files to speed your design process. Get Viewer.

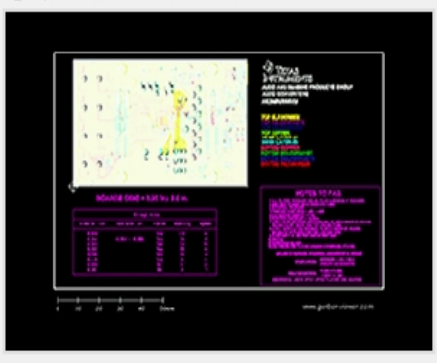

Download Design File

Bill of Materials (BOM)

Find the complete list of components in this reference design.

Download BOM

TI Devices (1)

Order samples, get tools and find more information on the TI products in this reference design.

Part Number	Name	Product Family	Sample & Buy	Design Kits & Evaluation Modules
UCC28630	High Power Flyback Controller with Primary-Side Regulation and Peak Power Mode	AC/DC and Isolated DC/DC Power Supply	Sample & Buy	View Design Kits & Evaluation Modules

Technical Documents

User Guides (2)

Title	Abstract	Type	Size (KB)	Date	Views
PMP9643 Transformer Winding Specification		PDF	407	15 May 2014	90
PMP9643 Test Results		PDF	909	14 May 2014	93

Design Files (6)

Title	Abstract	Type	Size (KB)	Date	Views
PMP9643 Altium		ZIP	16475	14 May 2014	77
PMP9643 Fabrication Drawing		PDF	188	14 May 2014	47
PMP9643 Assembly Drawing		PDF	186	14 May 2014	44
PMP9643 PCB		PDF	702	14 May 2014	65
PMP9643 BOM		PDF	52	14 May 2014	73
PMP9643 Schematic		PDF	127	14 May 2014	229

Support & Community

TI E2E™ community

TI E2E™ Community

As a member of my.TI you can join the TI E2E™ Community where you can ask questions, share ideas and collaborate with fellow engineers and TI experts

Contents are provided "AS IS" by the respective TI and Community contributors and do not constitute TI specifications. See Terms of use.

Engage in the Community

- Amplifiers
- Broadband RF/IF & Digital Radio
- Clocks & Timers
- Data Converters
- DLP® & MEMS
- Interface
- Logic
- Power Management
- Wireless Connectivity

Wikis

Visit the TI Wiki

Other Support

- TI E2E Community
- Contact Technical Support

Your History

Products You Recently Viewed

- PMP9361
- PMP9351
- PMP5471
- PMP5098
- TIDA-00258

TI is a global semiconductor design and manufacturing company. Innovate with 100,000+ analog ICs and embedded processors, along with software, tools and the industry's largest sales/support staff.

© Copyright 1995-2014 Texas Instruments Incorporated. All rights reserved.
Trademarks | Privacy policy | Terms of use | Terms of sale