Small, Simple, and Efficient Voltage Inverter for Op Amp Biasing Reference Design

(ACTIVE) PMP9752

Description & Features | Technical Documents | Support & Community | Order Now

View the Important Notice for TI Designs covering authorized use, intellectual property matters and disclaimers.

Description

In this reference design, the TPS62120 provides a small, simple, and efficient voltage inverting circuit to be used for low power negative voltage rails, such as biasing an op amp. This configuration has been tested with a full test report and operation explanation.

Features

- Only 6 external components required for a complete solution
- IC available in a 2 x 2 mm SON package for smallest size
- IC available in 3 x 3 mm SOT package for easier assembly and extra features
- Fully integrated, user selectable output discharge function
- 80% efficiency over a wide load range
- Up to 50 mA output current at 5V input

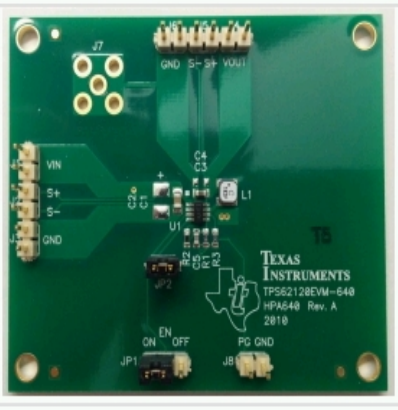

Small, Simple, and Efficient Voltage Inverter for Op Amp Biasing

Fully assembled board (shown above) developed for testing and performance validation only, not available for sale.

Schematic/Block Diagram

Quickly understand overall system functionality.

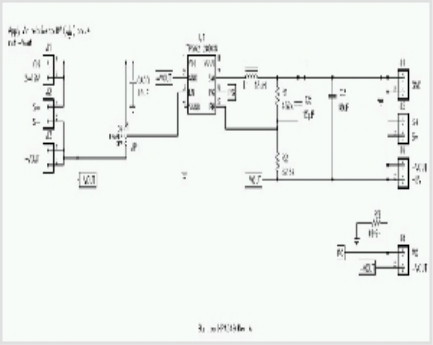

Download Schematic

Simulation Data

Get results faster with test and simulation data that's been verified.

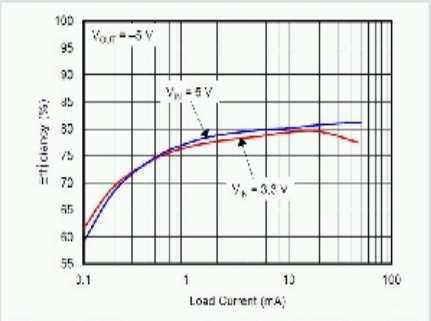

Figure 16. Efficiency versus Load Current with V_{OUT} = −5 V

Download Simulation Data

Design Files

Download ready-to-use system files to speed your design process. Get Viewer.

Download Design File

Bill of Materials (BOM)

Find the complete list of components in this reference design.

Download BOM

TI Devices (2)

Order samples, get tools and find more information on the TI products in this reference design.

Part Number	Name	Product Family	Sample & Buy	Design Kits & Evaluation Modules
TPS62120	15V, 75mA, 96% efficiency Step-Down Converter with DCS-Control	Converter (Integrated Switch)	Sample & Buy	View Design Kits & Evaluation Modules
TPS62122	15V, 75mA, 96% efficiency Step-Down Converter	Converter (Integrated Switch)	Sample & Buy	View Design Kits & Evaluation Modules

CAD/CAE symbols

Part #	Package | Pins	CAD File (.bxl)	STEP Model (.stp)
TPS62120	SOT (DCN) | 8	Download	-
TPS62122	WSON (DRV) | 6	Download	-

Texas Instruments and Accelerated Designs Inc. have collaborated together to provide TI customers with schematic symbols and PCB layout footprints for TI products.

Step 1: Download and install the Ultra Librarian software ZIP: 62MB

Step 2: Download the Symbol and Footprint .bxl file.

- read more -

Technical Documents

Application Notes (1)

Title	Abstract	Type	Size (KB)	Date	Views
Using the TPS62120 in an Inverting Buck-Boost Topology (Rev. B)	Read Abstract	PDF	1122	01 Oct 2013	595

User Guides (1)

Title	Abstract	Type	Size (KB)	Date	Views
PMP9752 Test Results		PDF	1109	02 May 2014	204

Design Files (3)

Title	Abstract	Type	Size (KB)	Date	Views
PMP9752 Gerber		ZIP	183	14 Apr 2014	160
PMP9752 BOM		PDF	51	14 Apr 2014	250
PMP9752 Schematic		PDF	33	14 Apr 2014	403

Support & Community

TI E2E™ community

TI E2E™ Community

As a member of my.TI you can join the TI E2E™ Community where you can ask questions, share ideas and collaborate with fellow engineers and TI experts

Contents are provided "AS IS" by the respective TI and Community contributors and do not constitute TI specifications. See Terms of use.

Engage in the Community

- Amplifiers
- Broadband RF/IF & Digital Radio
- Clocks & Timers
- Data Converters
- DLP® & MEMS
- Interface
- Logic
- Power Management
- Wireless Connectivity

Wikis

Visit the TI Wiki

Other Support

- TI E2E Community
- Contact Technical Support

Your History

Products You Recently Viewed

- PMP9657
- PMP9643
- PMP9361
- PMP9351
- PMP5471

TI is a global semiconductor design and manufacturing company. Innovate with 100,000+ analog ICs and embedded processors, along with software, tools and the industry's largest sales/support staff.

© Copyright 1995-2014 Texas Instruments Incorporated. All rights reserved.
Trademarks | Privacy policy | Terms of use | Terms of sale