Thunderbolt™ Single Port Peripheral Reference Design

(ACTIVE) TIDA-00268

Description & Features | Technical Documents | Support & Community | Order Now

View the Important Notice for TI Designs covering authorized use, intellectual property matters and disclaimers.

Description

The TI Thunderbolt™ Single Port Peripheral reference design is optimized for Thunderbolt 2 systems which have a bandwidth of 20Gbps. The design utilizes the TPS65980 power management unit to reduce the BOM cost up to 50% and reduce the area about 40% over a discrete implementation. This design has been tested and certified at Intel for both self power and bus powered single port Thunderbolt systems.

Features

- Tested & Certified Thunderbolt Design for Bus & Self-Powered Peripherals
- Provides a low cost and simple optimized design
- TPS65980 PMU powers the needed supplies and provides system control signals
- PCIe Connector for quick proto-typing w/ expansion cards
- Design guide and high level schematics provided

Fully assembled board (shown above) developed for testing and performance validation only, not available for sale.

Schematic/Block Diagram

Quickly understand overall system functionality.

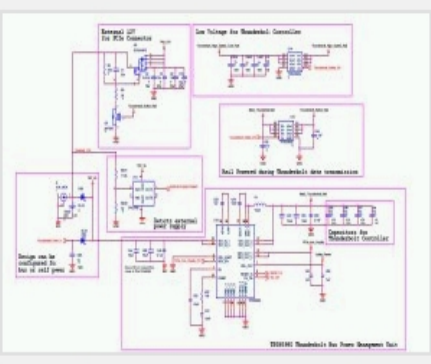

Download Schematic

Test Data

Get results faster with test and simulation data that's been verified.

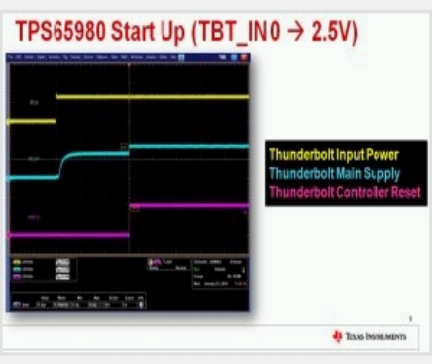

Download Test Data

Design Files

Download ready-to-use system files to speed your design process. Get Viewer.

Download Design File

Bill of Materials (BOM)

Find the complete list of components in this reference design.

Download BOM

TI Devices (6)

Order samples, get tools and find more information on the TI products in this reference design.

Part Number	Name	Product Family	Sample & Buy	Design Kits & Evaluation Modules
SN74AHC1G126	Single Bus Buffer Gate With 3-State Outputs	Logic	Not Available	Not Available
SN74AUP1G17	Low-Power Single Schmitt-Trigger Buffer	Logic	Sample & Buy	Not Available
SN74AUP1T17	Low Power, 1.8/2.5/3.3-V In, 3.3-V CMOS Out, Single Schmitt-Trigger Buffer Gate	Logic	Sample & Buy	Not Available

Show More

CAD/CAE symbols

Part #	Package | Pins	CAD File (.bxl)	STEP Model (.stp)
SN74AHC1G126	SOT (DBV) | 5	Download	Download
	SOT (DCK) | 5	Download	Download
	SOT (DRL) | 5	Download	-
SN74AUP1G17	DSBGA (YFP) | 4	Download	-
	SOT (DBV) | 5	Download	Download
	SOT (DCK) | 5	Download	Download
	SOT (DRL) | 5	Download	-
	DSBGA (YZP) | 5	Download	-
	USON (DRY) | 6	Download	-
	X2SON (DSF) | 6	Download	-
SN74AUP1T17	SOT (DCK) | 5	Download	Download
TPS22920L	DSBGA (YZP) | 8	Download	-
TPS65980	VQFN (RHF) | 24	Download	-

Texas Instruments and Accelerated Designs Inc. have collaborated together to provide TI customers with schematic symbols and PCB layout footprints for TI products.

Step 1: Download and install the Ultra Librarian software ZIP: 62MB

Step 2: Download the Symbol and Footprint .bxl file.

- read more -

Technical Documents

User Guides (2)

Title	Abstract	Type	Size (KB)	Date	Views
TIDA-00268 Thunderbolt(TM) Single-Port Testing		PDF	615	22 May 2014	71
Thunderbolt(TM) Single-Port Design Outline (TIDA-00268 Reference Guide)		PDF	874	21 May 2014	135

Design Files (3)

Title	Abstract	Type	Size (KB)	Date	Views
TIDA-00268 Assembly Drawing		PDF	50	22 May 2014	95
TIDA-00268 BOM		PDF	37	22 May 2014	93
TIDA-00268 Schematic		PDF	175	22 May 2014	229

Applications

- Printer
- Solid State Drive (SSD): Client

Support & Community

TI E2E™ community

As a member of my.TI you can join the TI E2E™ Community where you can ask questions, share ideas and collaborate with fellow engineers and TI experts

Contents are provided "AS IS" by the respective TI and Community contributors and do not constitute TI specifications. See Terms of use.

Engage in the Community

- Amplifiers
- Broadband RF/IF & Digital Radio
- Clocks & Timers
- Data Converters
- DLP® & MEMS
- Interface
- Logic
- Power Management
- Wireless Connectivity

Wikis

Visit the TI Wiki

Other Support

- TI E2E Community
- Contact Technical Support

Your History

Products You Recently Viewed

- PMP9752
- PMP9657
- PMP9643
- PMP9361
- PMP9351

TI is a global semiconductor design and manufacturing company. Innovate with 100,000+ analog ICs and embedded processors, along with software, tools and the industry's largest sales/support staff.

© Copyright 1995-2014 Texas Instruments Incorporated. All rights reserved.
Trademarks | Privacy policy | Terms of use | Terms of sale