Supercapacitor Manager Reference Design

(ACTIVE) TIDA-00258

TIDesigns

Description & Features | Technical Documents | Support & Community | Order Now

View the Important Notice for TI Designs covering authorized use, intellectual property matters and disclaimers.

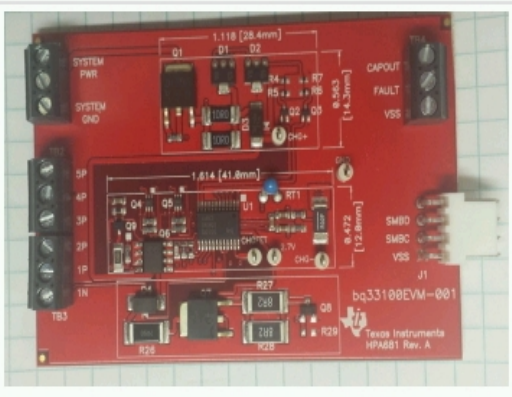

Supercapacitor Manager

Fully assembled board (shown above) developed for testing and performance validation only, not available for sale.

Description

The Supercapacitor Manager is a fully integrated, single-chip, solution that provides a rich array of features for managing, charge control, monitoring, and protection, for either 2, 3, 4 or 5 series Supercapacitors with individual capacitor monitoring and balancing or up to 9 series capacitors with only the stack voltage being measured.

Features

- Fully Integrated 2, 3, 4 and 5 Series Super Capacitor Manager
- Can Be Used With Up To 9 Series Capacitors Without Individual Integrated
- Capacitor Monitoring & Balancing
- Active Capacitor Voltage Balancing
- This circuit design is tested and is available as an EVM with firmware, GUI, and a User Guide.

Schematic/Block Diagram

Quickly understand overall system functionality.

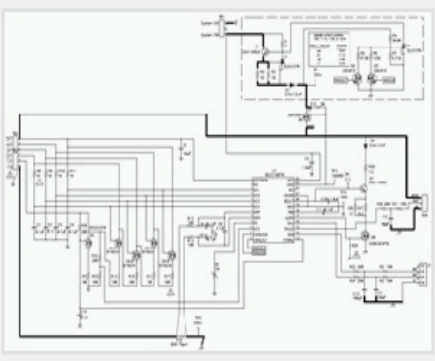

Download Schematic

Test Data

Get results faster with test and simulation data that's been verified.

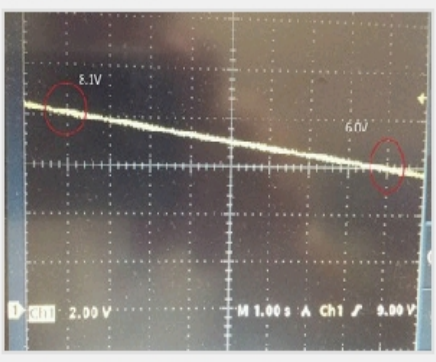

Download Test Data

Source Files

Download ready-to-use system files to speed your design process. Get Viewer.

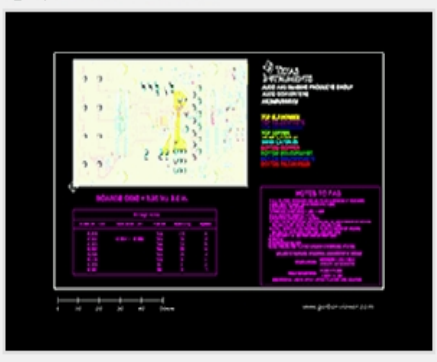

Download Source File

Bill of Materials (BOM)

Find the complete list of components in this reference design.

Download BOM

TI Devices (1)

Order samples, get tools and find more information on the TI products in this reference design.

Part Number	Name	Product Family	Sample & Buy	Design Kits & Evaluation Modules
BQ33100	Fully Integrated, Single Chip, Super Capacitor Manager	Battery Management Products	Sample & Buy	View Design Kits & Evaluation Modules

CAD/CAE symbols

Part #	Package | Pins	CAD File (.bxl)	STEP Model (.stp)
BQ33100	TSSOP (PW) | 24	Download	Download

Texas Instruments and Accelerated Designs Inc. have collaborated together to provide TI customers with schematic symbols and PCB layout footprints for TI products.

Step 1: Download and install the Ultra Librarian software ZIP: 62MB

Step 2: Download the Symbol and Footprint .bxl file.

- read more -

Technical Documents

User Guides (1)

Title	Abstract	Type	Size (KB)	Date	Views
TIDA-00258 Test Results		PDF	489	12 Jun 2014	65

Design Files (3)

Title	Abstract	Type	Size (KB)	Date	Views
TIDA-00258 Gerber		ZIP	283	12 Jun 2014	28
TIDA-00258 BOM		PDF	207	12 Jun 2014	16
TIDA-00258 Schematic		PDF	59	12 Jun 2014	62

Support & Community

TI E2E™ community

TI E2E™ Community

As a member of my.TI you can join the TI E2E™ Community where you can ask questions, share ideas and collaborate with fellow engineers and TI experts

Contents are provided "AS IS" by the respective TI and Community contributors and do not constitute TI specifications. See Terms of use.

Engage in the Community

- Amplifiers
- Broadband RF/IF & Digital Radio
- Clocks & Timers
- Data Converters
- DLP® & MEMS
- Interface
- Logic
- Power Management
- Wireless Connectivity

Wikis

Visit the TI Wiki

Other Support

- TI E2E Community
- Contact Technical Support

Your History

Products You Recently Viewed

- TIDA-00242
- TIDA-00160
- TIDA-TRIPLE-OUTPUT-BUCK-LDO-PMIC-REFERENCE-DESIGN
- TIDA-00268
- PMP9752

TI is a global semiconductor design and manufacturing company. Innovate with 100,000+ analog ICs and embedded processors, along with software, tools and the industry's largest sales/support staff.

© Copyright 1995-2014 Texas Instruments Incorporated. All rights reserved.
Trademarks | Privacy policy | Terms of use | Terms of sale