Pack-Side Impedance Track Fuel Gauge

(ACTIVE) TIDA-00241

Description & Features | Technical Documents | Support & Community | Order Now

View the Important Notice for TI Designs covering authorized use, intellectual property matters and disclaimers.

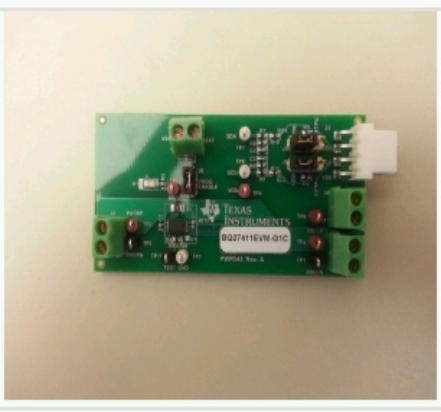

Fully assembled board (shown above) developed for testing and performance validation only, not available for sale.

Description

The Texas Instruments bq27411-G1 reference design is an easy to configure fuel gauging solution for single series cell Li-Ion battery packs. The device requires minimal configuration and uses One Time Programmable (OTP) Non-Volatile Memory (NVM) to avoid an initialization download by the system processor.
The bq27411-G1 uses the patented Impedance Track™ algorithm for fuel gauging, and provides information such as remaining battery capacity (mAh), state-of-charge (%), and battery voltage (mV).

Features

- Impedance Track technology
- Easy to configure
- Low BOM count
- Low power consumption
- This circuit design is tested and includes orderable EVM, User's Guide, and evaluation software.

Schematic/Block Diagram

Quickly understand overall system functionality.

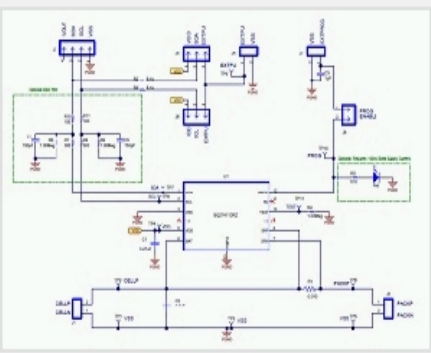

Download Schematic

Test Data

Get results faster with test and simulation data that's been verified.

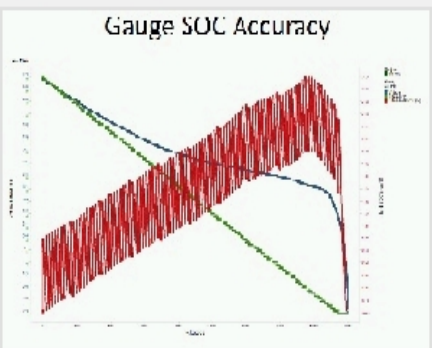

Download Test Data

Design Files

Download ready-to-use system files to speed your design process. Get Viewer.

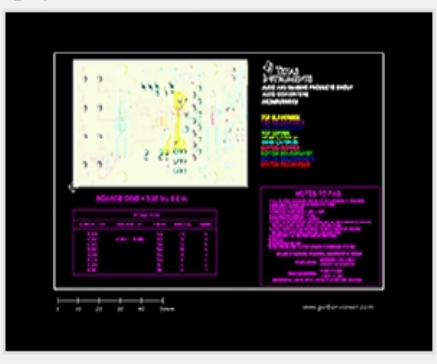

Download Design File

Bill of Materials (BOM)

Find the complete list of components in this reference design.

Download BOM

TI Devices (1)

Order samples, get tools and find more information on the TI products in this reference design.

Part Number	Name	Product Family	Sample & Buy	Design Kits & Evaluation Modules
BQ27411-G1	Pack-Side Impedance Track™ Fuel Gauge | Battery Gas Gauge	Battery Management Products	Sample & Buy	View Design Kits & Evaluation Modules

Technical Documents

User Guides (1)

Title	Abstract	Type	Size (KB)	Date	Views
TIDA-00241 Test Results		PDF	1357	18 Aug 2014	1 1

Design Files (3)

Title	Abstract	Type	Size (KB)	Date	Views
TIDA-00241 Gerber		ZIP	265	18 Aug 2014	0
TIDA-00241 BOM		PDF	53	18 Aug 2014	1 1
TIDA-00241 Schematic		PDF	30	18 Aug 2014	5

Related Tools & Software

Design Kits & Evaluation Modules (2)

Name	Part Number	Tool Type
BQ27411EVM-G1C Pack-Side Impedance Track™ Fuel (Gas) Gauge Evaluation Module	BQ27411EVM-G1C	Evaluation Modules & Boards
Pack-Side Impedance Track™ Fuel (Gas) Gauge Evaluation Module	BQ27411EVM-G1A	Evaluation Modules & Boards

Applications

Handset: Smartphone

Support & Community

TI E2E™ community

TI E2E™ Community

As a member of my.TI you can join the TI E2E™ Community where you can ask questions, share ideas and collaborate with fellow engineers and TI experts

Contents are provided "AS IS" by the respective TI and Community contributors and do not constitute TI specifications. See Terms of use.

Engage in the Community

- Amplifiers
- Broadband RF/IF & Digital Radio
- Clocks & Timers
- Data Converters
- DLP® & MEMS
- Interface
- Logic
- Power Management
- Wireless Connectivity

Wikis

Visit the TI Wiki

Other Support

- TI E2E Community
- Contact Technical Support

Your History

Products You Recently Viewed

- TIDA-00238
- TIDA-00269
- TIDA-00264
- TIDA-00261
- TIDA-00271

TI is a global semiconductor design and manufacturing company. Innovate with 100,000+ analog ICs and embedded processors, along with software, tools and the industry's largest sales/support staff.

© Copyright 1995-2014 Texas Instruments Incorporated. All rights reserved.
Trademarks | Privacy policy | Terms of use | Terms of sale