High Density 200 A (255 A Peak) 6 Phase DC-DC Buck Converter with PMBus Interface Reference Design

TIDesigns

(ACTIVE) PMP9738

Description & Features | Technical Documents | Support & Community | Order Now

View the Important Notice for TI Designs covering authorized use, intellectual property matters and disclaimers.

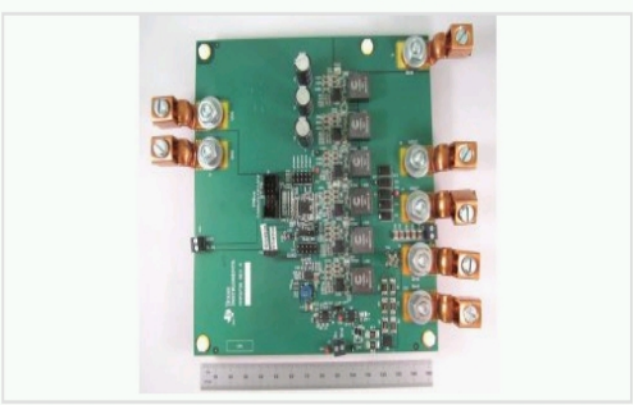

High Density 200 A (255 A Peak) 6 Phase DC-DC Buck Converter with PMBus Interface Reference Design (top view)

Description

Advanced DCAP+ control is used to provide the high speed dynamic control needed for CPU, Memory and ASIC applications. Six high current synchronous power stages provide the high currents and low losses needed for these applications. Multi-phase also allows output ripple cancellation and effective higher bandwidth control for a given switching frequency. PMP9738 focuses on ease of electrical testing and ability to make changes "on the fly" thru the PMBus interface. On board bias supplies and a high speed dynamic load round out the rich test interface.

Features

- Multiple fully synchronous power stages for high currents and lowest losses
- DCAP+ control for excellent step load response, SVID and PMBus interfaces
- Output voltage, switching frequency, number of phases can be adjusted "on the fly" through the PMBus interface
- Focus of evaluation board is on ease of electrical testing with almost all parts on top side
- Rich test interface including PMBus socket, 5V and 3.3V biases and high speed dynamic test load
- Schematic, BOM, layout and Test Report focusing on thermal performance and load dynamics

Fully assembled board (shown above) developed for testing and performance validation only, not available for sale.

TI's Standard Terms and Conditions for Evaluation Modules apply.

Schematic/Block Diagram

Quickly understand overall system functionality.

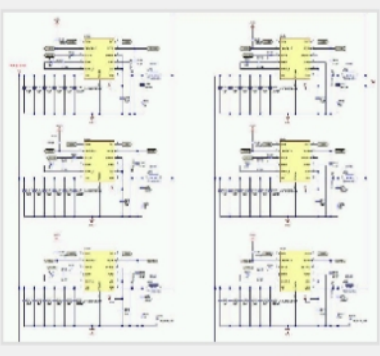

Download Schematic

Test Data

Get results faster with test and simulation data that's been verified.

Download Test Data

Design Files

Download ready-to-use system files to speed your design process. Get Viewer.

Download Design Files

Bill of Materials (BOM)

Find the complete list of components in this reference design.

Download BOM

Parametrics

	PMP9738
Vin (Max) (V)	13.2
Vin (Min) (V)	10.8
Vout (Nom) (V)	1
Iout (Max) (A)	200
Output Power	200
Isolated/Non-Isolated	Non-Isolated
Input Type	DC
Topology	Boost- Synchronous Buck- Multiphase

TI Devices (2)

Order samples, get tools and find more information on the TI products in this reference design.

Part Number	Name	Product Family	Sample & Buy	Design Kits & Evaluation Modules
CSD95372BQ5M	60A Synchronous Buck NexFET™ Smart Power Stage	Power MOSFET	Sample & Buy	Not Available
TPS53661	6-Phase, D-CAP+™ Step-Down VR12.x Server CPU VCORE	DC/DC Switching Regulator	Sample & Buy	Not Available

Technical Documents

User Guides (1)

Title	Abstract	Type	Size (KB)	Date	Views
PMP9738 Test Results		PDF	924	14 Jan 2015	4

Design Files (5)

Title	Abstract	Type	Size (KB)	Date	Views
PMP9738 Gerber		ZIP	918	14 Jan 2015	2
PMP9738 PCB		PDF	5686	14 Jan 2015	3
PMP9738 Assembly Drawing		PDF	395	14 Jan 2015	2
PMP9738 BOM		PDF	114	14 Jan 2015	2
PMP9738 Schematic		PDF	296	14 Jan 2015	7

Support & Community

TI E2E™ community

TI E2E™ Community

As a member of my.TI you can join the TI E2E™ Community where you can ask questions, share ideas and collaborate with fellow engineers and TI experts

Contents are provided "AS IS" by the respective TI and Community contributors and do not constitute TI specifications. See Terms of use.

Engage in the Community

- Amplifiers
- Broadband RF/IF & Digital Radio
- Clocks & Timers
- Data Converters
- DLP® & MEMS
- Interface
- Logic
- Power Management
- Wireless Connectivity

Wikis

Visit the TI Wiki

Training & events

Name	Type	Available During
SimpleLink™ Wi-Fi CC3100 and CC3200 Project 0 Series - 5 Part Series Learn about using Software Tools for SimpleLink™ Wi-Fi CC3100 Boosterpack and CC3200 Launchpad	On-Line Training	On Demand
TI-RTOS Update Learn about the latest TI-RTOS features and more in-depth understanding of this TI software tool.	On-Line Training	On Demand
Designing with Ultra Low Power Segmented Displays Learn about designing Ultra-low Power Segmented Displays and MSP430	On-Line Training	On Demand

See more training & events

Other Support

- TI E2E Community
- Contact Technical Support

Your History

Products You Recently Viewed

- PMP10350
- TIDA-00282
- PMP10847
- PMP7030
- PMP9380

TI is a global semiconductor design and manufacturing company. Innovate with 100,000+ analog ICs and embedded processors, along with software, tools and the industry's largest sales/support staff.

© Copyright 1995-2014 Texas Instruments Incorporated. All rights reserved.
Trademarks | Privacy policy | Terms of use | Terms of sale