5W WPC (Qi) Compliant Wireless Power Transmitter for 5V Applications Reference Design

TIDesigns

(ACTIVE) TIDA-00259

Description & Features | Technical Documents | Support & Community | Order Now

View the Important Notice for TI Designs covering authorized use, intellectual property matters and disclaimers.

Description

This reference design showcases the bq500212A in a 5W WPC (Qi) compliant wireless power transmitter for 5V applications. The transmitter circuits are laid out in a 50mm X 50mm configuration which matches the dimensions for WPC Type A11 TX Coil. The design is Qi certified and has been certified to WPC v1.1 standard.

Features

- WPC v1.1 Compliant Design
- 5V operating voltage
- Dynamic Power Limiting allows operation from a 5-V supply with limted current capability

TI's Standard Terms and Conditions for Evaluation Modules apply.

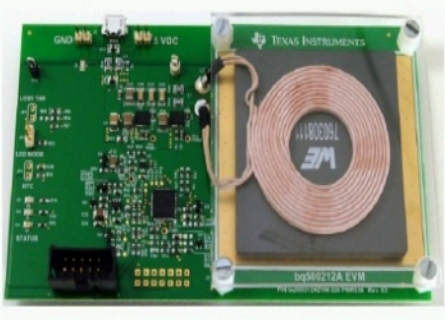

TIDA-00259 Board Image

Fully assembled board (shown above) developed for testing and performance validation only, not available for sale.

Schematic/Block Diagram

Quickly understand overall system functionality.

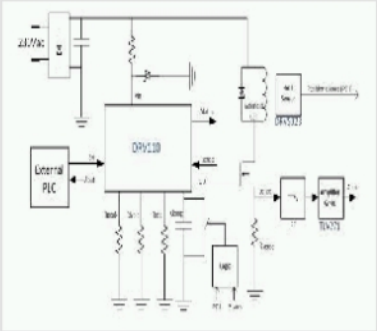

Download Schematic

Test Data

Get results faster with test and simulation data that's been verified.

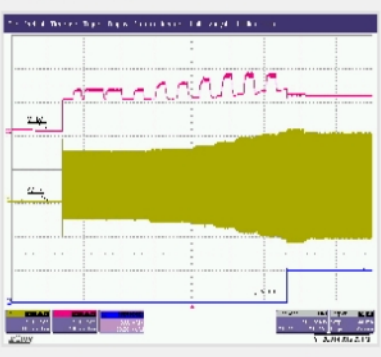

Download Test Data

Design Files

Download ready-to-use system files to speed your design process. Get Viewer.

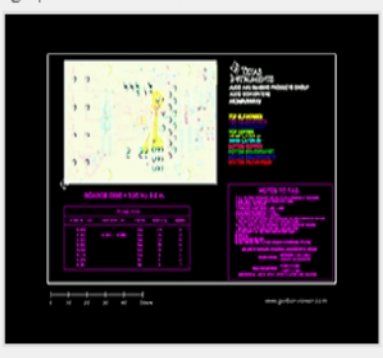

Download Design Files

Bill of Materials (BOM)

Find the complete list of components in this reference design.

Download BOM

TI Devices (1)

Order samples, get tools and find more information on the TI products in this reference design.

Part Number	Name	Product Family	Sample & Buy	Design Kits & Evaluation Modules
BQ500212A	Qi Compliant 5V Wireless Power Transmitter Manager	Battery Management Products	Sample & Buy	View Design Kits & Evaluation Modules

CAD/CAE symbols

Part #	Package | Pins	CAD File (.bxl)	STEP Model (.stp)
BQ500212A	VQFN (RGZ) | 48	Download	-

Texas Instruments and Accelerated Designs Inc. have collaborated together to provide TI customers with schematic symbols and PCB layout footprints for TI products.

Step 1: Download and install the Ultra Librarian software ZIP: 62MB

Step 2: Download the Symbol and Footprint .bxl file.

- read more -

Technical Documents

User Guides (1)

Title	Abstract	Type	Size (KB)	Date	Views
TIDA-00259 Test Results		PDF	1330	05 Jan 2015	47

Design Files (7)

Title	Abstract	Type	Size (KB)	Date	Views
TIDA-00259 Gerber		ZIP	594	05 Jan 2015	14
TIDA-00259 CAD Files		ZIP	1113	05 Jan 2015	23
TIDA-00259 PCB		PDF	1315	05 Jan 2015	27
TIDA-00259 Assembly Drawing		PDF	513	05 Jan 2015	26
TIDA-00259 BOM		PDF	77	05 Jan 2015	37
TIDA-00259 Block Diagram		PDF	53	05 Jan 2015	63
TIDA-00259 Schematic		PDF	353	05 Jan 2015	67

Applications

- Handset: Smartphone
- Medical Meters: Portable
- Power: Battery Management

Support & Community

TI E2E™ community

TI E2E™ Community

As a member of my.TI you can join the TI E2E™ Community where you can ask questions, share ideas and collaborate with fellow engineers and TI experts

Contents are provided "AS IS" by the respective TI and Community contributors and do not constitute TI specifications. See Terms of use.

Engage in the Community

- Amplifiers
- Broadband RF/IF & Digital Radio
- Clocks & Timers
- Data Converters
- DLP® & MEMS
- Interface
- Logic
- Power Management
- Wireless Connectivity

Wikis

Visit the TI Wiki

Training & events

Name	Type	Available During
SimpleLink™ Wi-Fi CC3100 and CC3200 Project 0 Series - 5 Part Series Learn about using Software Tools for SimpleLink™ Wi-Fi CC3100 Boosterpack and CC3200 Launchpad	On-Line Training	On Demand
TI-RTOS Update Learn about the latest TI-RTOS features and more in-depth understanding of this TI software tool.	On-Line Training	On Demand
Designing with Ultra Low Power Segmented Displays Learn about designing Ultra-low Power Segmented Displays and MSP430	On-Line Training	On Demand

See more training & events

Other Support

- TI E2E Community
- Contact Technical Support

Your History

Products You Recently Viewed

- TIDM-BUCKBOOST-BIDIR
- TIDA-00389
- PMP7038
- TIDA-00390
- PMP9616

TI is a global semiconductor design and manufacturing company. Innovate with 100,000+ analog ICs and embedded processors, along with software, tools and the industry's largest sales/support staff.

© Copyright 1995-2014 Texas Instruments Incorporated. All rights reserved.
Trademarks | Privacy policy | Terms of use | Terms of sale

ecia MEMBER