# Offline AC/DC 120W Multi-Output Flyback Power Supply Reference Design

(ACTIVE) PMP4408.3

Description & Features | Technical Documents | Support & Community | Order Now

View the Important Notice for TI Designs covering authorized use, intellectual property matters and disclaimers.

## Description

The PMP4408 is a universal AC input, 120W flyback converter reference design. The LM5023 Quasi Resonant Flyback converter was chosen to get 2 high-efficiency isolated outputs. Additionally a downstream Buck converter, the TPS5402 enables 2 high-efficiency non-isolated outputs. The QR Flyback design implements Valley switching for high-efficiency and full protection features such as output short circuit and output overvoltage.

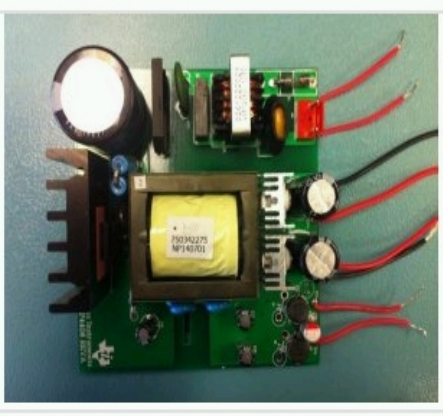

Offline AC/DC 120W Multi-Output Flyback Power Supply Reference Design

## Features

- Good cross regulation
- Valley switching for high efficiency
- Output OVP, OCP and Short Circuit Protection
- Input brown-out
- Average efficiency is high
- Size 92mm(L) x 95mm(W) x 30mm(H)

Fully assembled board (shown above) developed for testing and performance validation only, not available for sale.

TI's Standard Terms and Conditions for Evaluation Modules apply.

## Schematic/Block Diagram

Quickly understand overall system functionality.

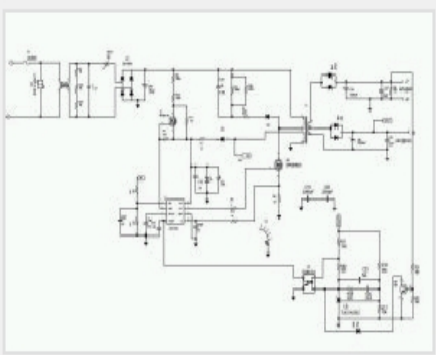

Download Schematic

## Test Data

Get results faster with test and simulation data that's been verified.

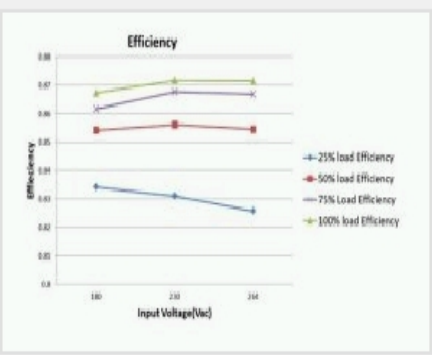


Download Test Data

## Design Files

Download ready-to-use system files to speed your design process. Get Viewer.

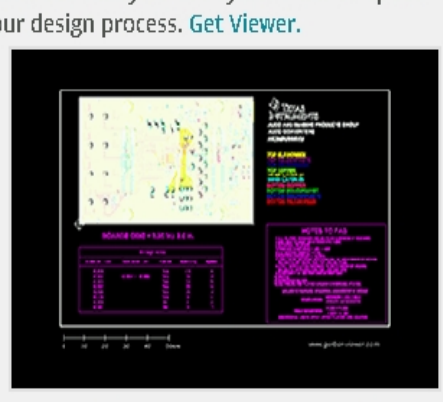

Download Design Files

## Bill of Materials (BOM)

Find the complete list of components in this reference design.

Download BOM

## Parametrics

| | PMP4408.3 |
|---|---|
| Vin (Min) (V) | 20 |
| Vin (Max) (V) | 28 |
| Vout (Nom) (V) | 5 |
| Iout (Max) (A) | 1.5 |
| Output Power | 7.5 |
| Isolated/Non-Isolated | Non-Isolated |
| Input Type | DC |
| Topology | Buck- Non Sync |

## TI Devices (2)

Order samples, get tools and find more information on the TI products in this reference design.

| Part Number | Name | Product Family | Sample & Buy | Design Kits & Evaluation Modules |
|---|---|---|---|---|
| LM5023 | AC-DC Quasi-Resonant Current Mode PWM Controller | AC/DC and Isolated DC/DC Power Supply | Sample & Buy | View Design Kits & Evaluation Modules |
| TPS5402 | 3.5V to 28V Input, 1.7A Output, Non-Synchronous Step-Down Regulator with Integrated MOSFET | Converter (Integrated Switch) | Sample & Buy | View Design Kits & Evaluation Modules |

## CAD/CAE symbols

| Part # | Package \| Pins | CAD File (.bxl) | STEP Model (.stp) |
|---|---|---|---|
| LM5023 | VSSOP (DGK) \| 8 | Download | Download |
| TPS5402 | SOIC (D) \| 8 | Download | Download |

Texas Instruments and Accelerated Designs Inc. have collaborated together to provide TI customers with schematic symbols and PCB layout footprints for TI products.

Step 1: Download and install the Ultra Librarian software ZIP: 62MB

Step 2: Download the Symbol and Footprint .bxl file.

- read more -

## Technical Documents

### User guides (1)

| Title | Abstract | Type | Size (KB) | Date | Views |
|---|---|---|---|---|---|
| PMP4408 Test Results | | PDF | 371 | 10 Mar 2015 | 0 |

### Design files (3)

| Title | Abstract | Type | Size (KB) | Date | Views |
|---|---|---|---|---|---|
| PMP4408 Gerber | | ZIP | 101 | 10 Mar 2015 | 0 |
| PMP4408 BOM | | PDF | 29 | 10 Mar 2015 | 0 |
| PMP4408 Schematic | | PDF | 43 | 10 Mar 2015 | 0 |

## Support & Community

### TI E2E™ community

TI E2E™ Community

As a member of my.TI you can join the TI E2E™ Community where you can ask questions, share ideas and collaborate with fellow engineers and TI experts

Contents are provided "AS IS" by the respective TI and Community contributors and do not constitute TI specifications. See Terms of use.

Engage in the Community

- Amplifiers
- Broadband RF/IF & Digital Radio
- Clocks & Timers
- Data Converters
- DLP® & MEMS
- Interface
- Logic
- Power Management
- Wireless Connectivity

### Wikis

Visit the TI Wiki

### Other Support

- TI E2E Community
- Contact Technical Support

### Your History

Products You Recently Viewed

- PMP4465.2
- PMP10035
- PMP10514
- PMP10077
- PMP10507



TI is a global semiconductor design and manufacturing company. Innovate with 100,000+ analog ICs and embedded processors, along with software, tools and the industry's largest sales/support staff.

© Copyright 1995-2015 Texas Instruments Incorporated. All rights reserved.
Trademarks | Privacy policy | Terms of use | Terms of sale