270W Dual-Phase Boost Converter for Automotive Applications Reference Design

(ACTIVE) PMP9595

Description & Features | Technical Documents | Support & Community | Order Now

View the Important Notice for TI Designs covering authorized use, intellectual property matters and disclaimers.

Description

This two-phase boost operates from 6V - 36Vin and supplies 18V at 15A out (inputs higher than 18V pass through to the output). Small surface mount components are realized thanks to a high switching frequency and ripple cancellation on input and output capacitors.

Features

- Efficiency is greater than 98% at full load with 15V input
- Input voltages greater than 18V will pass through to output
- Board length is approximately 115mm
- Test report is available

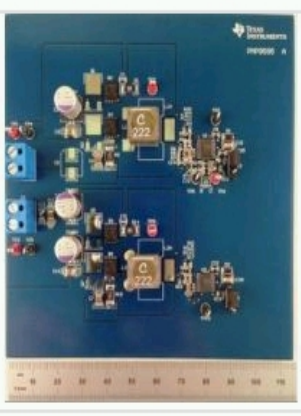

PMP9595 Board

Fully assembled board (shown above) developed for testing and performance validation only, not available for sale.

TI's Standard Terms and Conditions for Evaluation Modules apply.

Schematic/Block Diagram

Quickly understand overall system functionality.

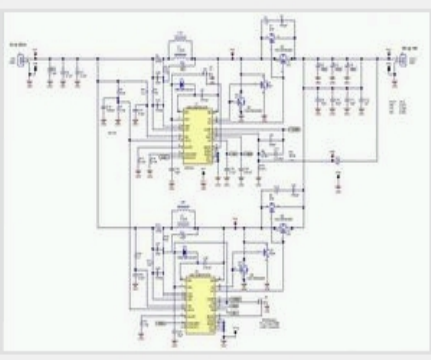

Download Schematic

Test Data

Get results faster with test and simulation data that's been verified.

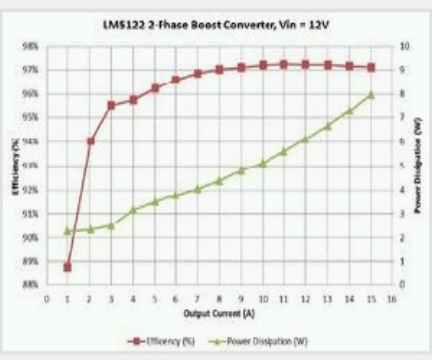

Download Test Data

Design Files

Download ready-to-use system files to speed your design process. Get Viewer.

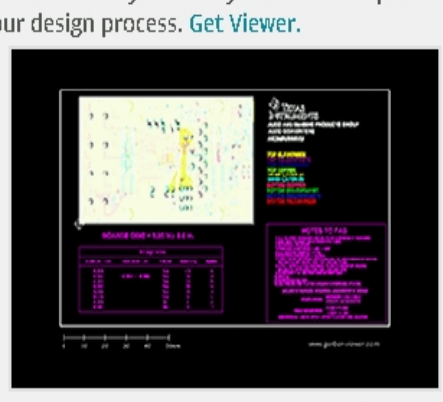

Download Design Files

Bill of Materials (BOM)

Find the complete list of components in this reference design.

Download BOM

Parametrics

	PMP9595
Vin (Min) (V)	6
Vin (Max) (V)	36
Vout (Nom) (V)	18
Iout (Max) (A)	15
Output Power	270
Isolated/Non-Isolated	Non-Isolated
Input Type	DC
Topology	Boost- Multiphase

TI Devices (2)

Order samples, get tools and find more information on the TI products in this reference design.

Part Number	Name	Product Family	Sample & Buy	Design Kits & Evaluation Modules
CSD18532Q5B	60-V, N-Channel NexFET™ Power MOSFET	Power MOSFET	Sample & Buy	View Design Kits & Evaluation Modules
LM5122	3-65V Wide Vin, Current Mode Synchronous Boost Controller with Multiphase Capability	Controller (External Switch)	Sample & Buy	View Design Kits & Evaluation Modules

CAD/CAE symbols

Part #	Package | Pins	CAD File (.bxl)	STEP Model (.stp)
CSD18532Q5B	VSON-CLIP (DNK)| 8	Download	-
LM5122	HTSSOP (PWP) | 20	Download	Download

Texas Instruments and Accelerated Designs Inc. have collaborated together to provide TI customers with schematic symbols and PCB layout footprints for TI products.

Step 1: Download and install the Ultra Librarian software ZIP: 62MB

Step 2: Download the Symbol and Footprint .bxl file.

- read more -

Technical Documents

User guides (1)

Title	Abstract	Type	Size (KB)	Date	Views
PMP9595 Test Results		PDF	3514	07 Apr 2015	0

Design files (3)

Title	Abstract	Type	Size (KB)	Date	Views
PMP9595 Gerber		ZIP	277	07 Apr 2015	0
PMP9595 BOM		PDF	35	07 Apr 2015	0
PMP9595 Schematic		PDF	144	07 Apr 2015	0

Support & Community

TI E2E™ community

TI E2E™ Community

As a member of my.TI you can join the TI E2E™ Community where you can ask questions, share ideas and collaborate with fellow engineers and TI experts

Contents are provided "AS IS" by the respective TI and Community contributors and do not constitute TI specifications. See Terms of use.

Engage in the Community

- Amplifiers
- Broadband RF/IF & Digital Radio
- Clocks & Timers
- Data Converters
- DLP® & MEMS
- Interface
- Logic
- Power Management
- Wireless Connectivity

Wikis

Visit the TI Wiki

Other Support

- TI E2E Community
- Contact Technical Support

Your History

Products You Recently Viewed

- PMP10852B
- PMP9624
- PMP10538
- PMP11047
- PMP10977

TI is a global semiconductor design and manufacturing company. Innovate with 100,000+ analog ICs and embedded processors, along with software, tools and the industry's largest sales/support staff.

© Copyright 1995-2015 Texas Instruments Incorporated. All rights reserved.
Trademarks | Privacy policy | Terms of use | Terms of sale