Highlighted Integrated Buck Converter for MTK3360/70 Power in Automotive Applications Reference Design

(ACTIVE) PMP4465.5

Description & Features | Technical Documents | Support & Community | Order Now

View the Important Notice for TI Designs covering authorized use, intellectual property matters and disclaimers.

Key Document

- PMP4465 Test Results (PDF 1126 KB)
  14 May 2015

» View All Technical Documents (4)

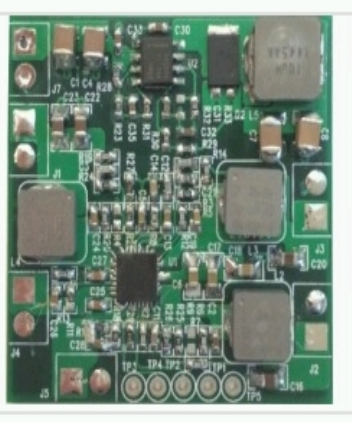

PMP4465.5 Highlighted Buck Converter for MTK3360/70 Power in Automotive Applications Reference Design Board Image

Fully assembled board (shown above) developed for testing and performance validation only, not available for sale.

Description

The PMP4465 is a reference design solution for powering MTK3360/70 processors used in automotive video applications. The TPS54360-Q1 provides a wide input voltage range of 7V to 42V and provides a stable 5V output for TPS65262-Q1. The TPS65262-Q1 integrates three buck converters and dual adjustable LDOs to get 5 regulated outputs. The PMP4465 provides a total solution from the battery to terminal loads.

Features

- High Integration solution
- Extra high efficiency at light load due to Pulse Skipping Mode (TPS65262) and Eco-mode (TPS54360)
- Input brown-out programmable
- Thermal Overloading Protection
- Small Size: 40mm(L)X40mm(W)x4mm(H)

TI's Standard Terms and Conditions for Evaluation Modules apply.

Schematic/Block Diagram

Quickly understand overall system functionality.

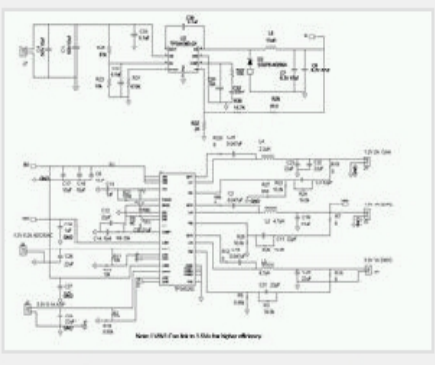

Download Schematic

Test Data

Get results faster with test and simulation data that's been verified.

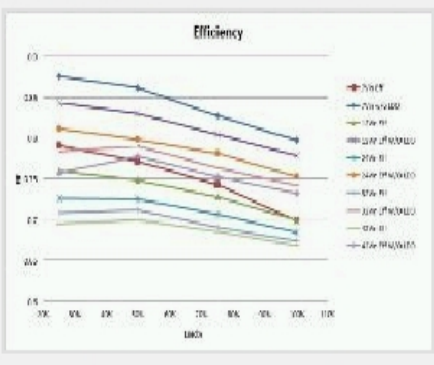

Download Test Data

Design Files

Download ready-to-use system files to speed your design process. Get Viewer.

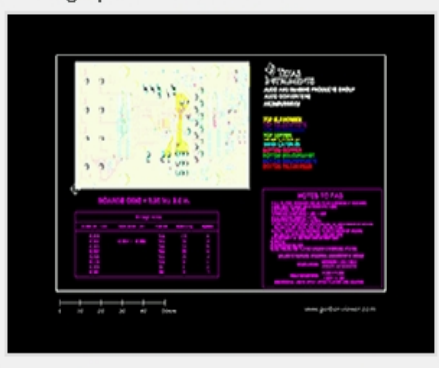

Download Design Files

Bill of Materials (BOM)

Find the complete list of components in this reference design.

Download BOM

Parametrics

	PMP4465.5
Vin (Min) [V]	5
Vin (Max) [V]	5
Vout (Nom) [V]	1.2
Iout (Max) [A]	.2
Output Power	.24
Isolated/Non-Isolated	Non-Isolated
Input Type	DC
Topology	Linear Regulator

TI Devices (3)

Order samples, get tools and find more information on the TI products in this reference design.

Part Number	Name	Product Family	Sample & Buy	Design Kits & Evaluation Modules
TPS54360-Q1	4.5-V to 60-V Input, 3.5-A, Step-Down DC-DC Converter with Eco-mode™	Converter (Integrated Switch)	Sample & Buy	View Design Kits & Evaluation Modules
TPS65262	18V Input, 3A/1A/1A Triple Synchronous Step-Down Converter with 200mA/100mA Dual LDOs	Converter (Integrated Switch)	Sample & Buy	View Design Kits & Evaluation Modules
TPS65262-1	4.5V to 18V Input, 3A/1A/1A Triple Synchronous Step-Down Converter with 350mA/150mA Dual LDOs	Converter (Integrated Switch)	Sample & Buy	View Design Kits & Evaluation Modules

CAD/CAE symbols

Part #	Package | Pins	CAD File (.bxl)	STEP Model (.stp)
TPS65262	VQFN (RHB) | 32	Download	-
TPS65262-1	VQFN (RHB) | 32	Download	-

Texas Instruments and Accelerated Designs Inc. have collaborated together to provide TI customers with schematic symbols and PCB layout footprints for TI products.

Step 1: Download and install the Ultra Librarian software ZIP: 62MB

Step 2: Download the Symbol and Footprint .bxl file.

- read more -

Technical Documents

User guides (1)

Title	Abstract	Type	Size (KB)	Date	Views	TI Recommends
PMP4465 Test Results		PDF	1126	14 May 2015	0	✓

Design files (3)

Title	Abstract	Type	Size (KB)	Date	Views
PMP4465 Altium		ZIP	210	14 May 2015	0
PMP4465 BOM		PDF	33	14 May 2015	0
PMP4465 Schematic		PDF	35	14 May 2015	0

Applications

- Display

Support & Community

TI E2E™ community

TI E2E™ Community

As a member of my.TI you can join the TI E2E™ Community where you can ask questions, share ideas and collaborate with fellow engineers and TI experts

Contents are provided "AS IS" by the respective TI and Community contributors and do not constitute TI specifications. See Terms of use.

Engage in the Community

- Amplifiers
- Broadband RF/IF & Digital Radio
- Clocks & Timers
- Data Converters
- DLP® & MEMS
- Interface
- Logic
- Power Management
- Wireless Connectivity

Wikis

Visit the TI Wiki

Other Support

- TI E2E Community
- Contact Technical Support

Your History

Products You Recently Viewed

- PMP10155
- PMP4475
- PMP9595
- PMP10852B
- PMP9624

TI is a global semiconductor design and manufacturing company. Innovate with 100,000+ analog ICs and embedded processors, along with software, tools and the industry's largest sales/support staff.

© Copyright 1995-2015 Texas Instruments Incorporated. All rights reserved.
Trademarks | Privacy policy | Terms of use | Terms of sale