Reference Design - Two Switch Buck Boost Built with a Buck Controller

(ACTIVE) PMP7156

Description & Features | Technical Documents | Support & Community | Order Now

View the Important Notice for TI Designs covering authorized use, intellectual property matters and disclaimers.

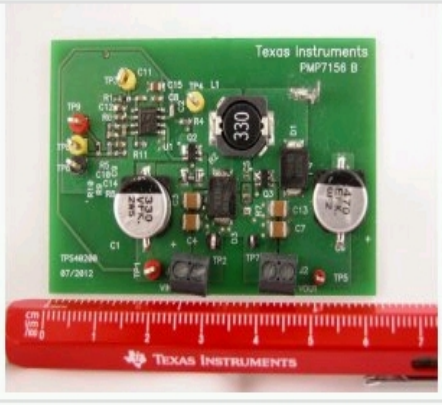

Description

This reference design provides a solution to how to build a two switch Buck Boost Converter with a Buck Controller for small loads. An input voltage between 8V and 16V is converted to 12V at the output with a 1A load.

Features

- Built and tested
- Inexpensive
- No need for 2 SW Buck Boost IC

Fully assembled board (shown above) developed for testing and performance validation only, not available for sale.

TI's Standard Terms and Conditions for Evaluation Modules apply.

Schematic/Block Diagram

Quickly understand overall system functionality.

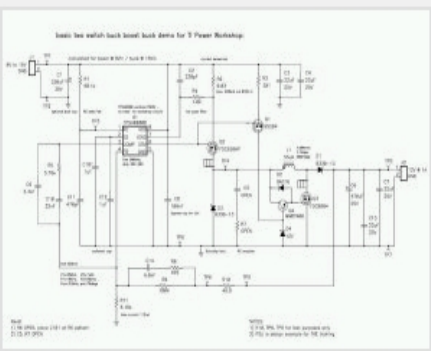

Download Schematic

Test Data

Get results faster with test and simulation data that's been verified.

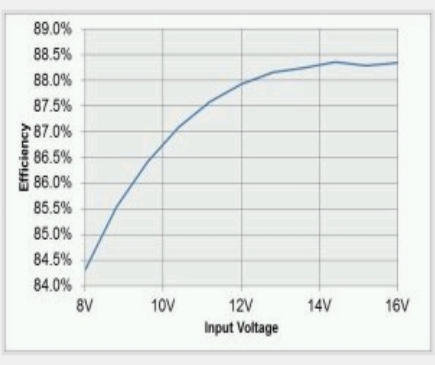

Download Test Data

Design Files

Download ready-to-use system files to speed your design process. Get Viewer.

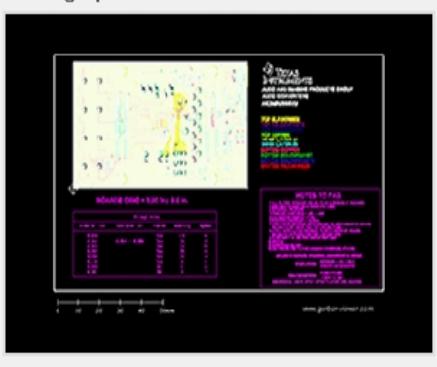

Download Design Files

Bill of Materials (BOM)

Find the complete list of components in this reference design.

Download BOM

Parametrics

	PMP7156
Vin (Min) (V)	8
Vin (Max) (V)	16
Vout (Nom) (V)	12
Iout (Max) (A)	1
Output Power	12
Isolated/Non-Isolated	Non-Isolated
Input Type	DC
Topology	Buck Boost- 2 Switch

TI Devices (1)

Order samples, get tools and find more information on the TI products in this reference design.

Part Number	Name	Product Family	Sample & Buy	Design Kits & Evaluation Modules
TPS40200	Wide Input Non-Synchronous Buck DC/DC Controller	Controller (External Switch)	Sample & Buy	View Design Kits & Evaluation Modules

CAD/CAE symbols

Part #	Package | Pins	CAD File (.bxl)	STEP Model (.stp)
TPS40200	SOIC (D) | 8	Download	Download
	VSON (DRB) | 8	Download	Download

Texas Instruments and Accelerated Designs Inc. have collaborated together to provide TI customers with schematic symbols and PCB layout footprints for TI products.

Step 1: Download and install the Ultra Librarian software ZIP: 62MB

Step 2: Download the Symbol and Footprint .bxl file.

- read more -

Technical Documents

User guides (1)

Title	Abstract	Type	Size (KB)	Date	Views
PMP7156 Test Results		PDF	617	15 Apr 2015	0

Design files (4)

Title	Abstract	Type	Size (KB)	Date	Views
PMP7156 Gerber		ZIP	41	15 Apr 2015	0
PMP7156 PCB		PDF	37	15 Apr 2015	0
PMP7156 BOM		PDF	19	15 Apr 2015	0
PMP7156 Schematic		PDF	66	15 Apr 2015	0

Applications

- Cluster

Support & Community

TI E2E™ community

TI E2E™ Community

As a member of my.TI you can join the TI E2E™ Community where you can ask questions, share ideas and collaborate with fellow engineers and TI experts

Contents are provided "AS IS" by the respective TI and Community contributors and do not constitute TI specifications. See Terms of use.

Engage in the Community

- Amplifiers
- Broadband RF/IF & Digital Radio
- Clocks & Timers
- Data Converters
- DLP® & MEMS
- Interface
- Logic
- Power Management
- Wireless Connectivity

Wikis

Visit the TI Wiki

Other Support

- TI E2E Community
- Contact Technical Support

Your History

Products You Recently Viewed

- TIDA-00400
- TIDA-00490
- PMP10509
- PMP4468
- PMP9581_REVC

TI is a global semiconductor design and manufacturing company. Innovate with 100,000+ analog ICs and embedded processors, along with software, tools and the industry's largest sales/support staff.

© Copyright 1995-2015 Texas Instruments Incorporated. All rights reserved.
Trademarks | Privacy policy | Terms of use | Terms of sale