Offline AC/DC 120W Multi-Output Flyback Power Supply Reference Design

(ACTIVE) PMP4408.2

Description & Features | Technical Documents | Support & Community | Order Now

View the Important Notice for TI Designs covering authorized use, intellectual property matters and disclaimers.

Description

The PMP4408 is a universal AC input, 120W flyback converter reference design. The LM5023 Quasi Resonant Flyback converter was chosen to get 2 high-efficiency isolated outputs. Additionally a downstream Buck converter, the TPS5402 enables 2 high-efficiency non-isolated outputs. The QR Flyback design implements Valley switching for high-efficiency and full protection features such as output short circuit and output overvoltage.

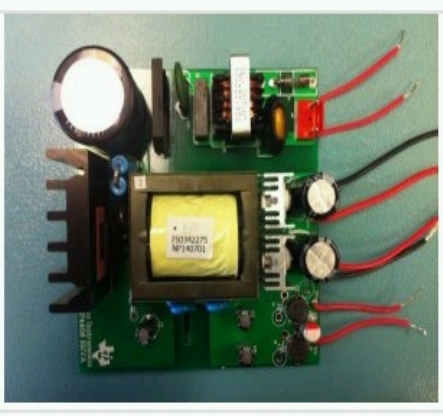

Offline AC/DC 120W Multi-Output Flyback Power Supply Reference Design

Features

- Good cross regulation
- Valley switching for high efficiency
- Output OVP, OCP and Short Circuit Protection
- Input brown-out
- Average efficiency is high
- Size 92mm(L) x 95mm(W) x 30mm(H)

Fully assembled board (shown above) developed for testing and performance validation only, not available for sale.

TI's Standard Terms and Conditions for Evaluation Modules apply.

Schematic/Block Diagram

Quickly understand overall system functionality.

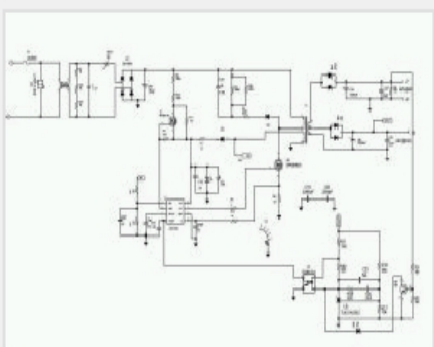

Download Schematic

Test Data

Get results faster with test and simulation data that's been verified.

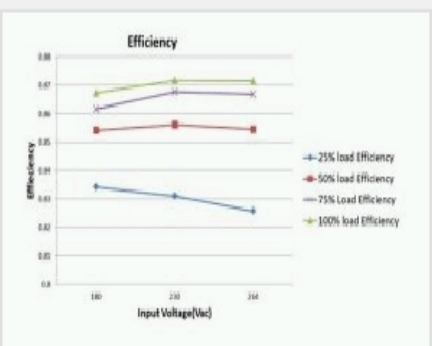

Download Test Data

Design Files

Download ready-to-use system files to speed your design process. Get Viewer.

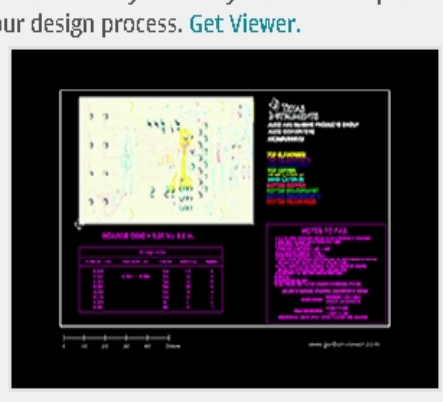

Download Design Files

Bill of Materials (BOM)

Find the complete list of components in this reference design.

Download BOM

Parametrics

	PMP4408.2
Vin (Min) (V)	20
Vin (Max) (V)	28
Vout (Nom) (V)	15
Iout (Max) (A)	.8
Output Power	12
Isolated/Non-Isolated	Non-Isolated
Input Type	DC
Topology	Buck- Non Sync

TI Devices (2)

Order samples, get tools and find more information on the TI products in this reference design.

Part Number	Name	Product Family	Sample & Buy	Design Kits & Evaluation Modules
LM5023	AC-DC Quasi-Resonant Current Mode PWM Controller	AC/DC and Isolated DC/DC Power Supply	Sample & Buy	View Design Kits & Evaluation Modules
TPS5402	3.5V to 28V Input, 1.7A Output, Non-Synchronous Step-Down Regulator with Integrated MOSFET	Converter (Integrated Switch)	Sample & Buy	View Design Kits & Evaluation Modules

CAD/CAE symbols

Part #	Package | Pins	CAD File (.bxl)	STEP Model (.stp)
LM5023	VSSOP (DGK) | 8	Download	Download
TPS5402	SOIC (D) | 8	Download	Download

Texas Instruments and Accelerated Designs Inc. have collaborated together to provide TI customers with schematic symbols and PCB layout footprints for TI products.

Step 1: Download and install the Ultra Librarian software ZIP: 62MB

Step 2: Download the Symbol and Footprint .bxl file.

- read more -

Technical Documents

User guides (1)

Title	Abstract	Type	Size (KB)	Date	Views
PMP4408 Test Results		PDF	371	10 Mar 2015	0

Design files (3)

Title	Abstract	Type	Size (KB)	Date	Views
PMP4408 Gerber		ZIP	101	10 Mar 2015	0
PMP4408 BOM		PDF	29	10 Mar 2015	0
PMP4408 Schematic		PDF	43	10 Mar 2015	0

Support & Community

TI E2E™ community

TI E2E™ Community

As a member of my.TI you can join the TI E2E™ Community where you can ask questions, share ideas and collaborate with fellow engineers and TI experts

Contents are provided "AS IS" by the respective TI and Community contributors and do not constitute TI specifications. See Terms of use.

Engage in the Community

- Amplifiers
- Broadband RF/IF & Digital Radio
- Clocks & Timers
- Data Converters
- DLP® & MEMS
- Interface
- Logic
- Power Management
- Wireless Connectivity

Wikis

Visit the TI Wiki

Other Support

- TI E2E Community
- Contact Technical Support

Your History

Products You Recently Viewed

- PMP7156
- TIDA-00400
- TIDA-00490
- PMP10509
- PMP4468

TI is a global semiconductor design and manufacturing company. Innovate with 100,000+ analog ICs and embedded processors, along with software, tools and the industry's largest sales/support staff.

© Copyright 1995-2015 Texas Instruments Incorporated. All rights reserved.
Trademarks | Privacy policy | Terms of use | Terms of sale