Cost-optimized power supply solution for entry-level core application processor-based ADAS systems

(ACTIVE) TIDA-00346

Description & Features | Technical Documents | Support & Community | Order Now

View the Important Notice for TI Designs covering authorized use, intellectual property matters and disclaimers.

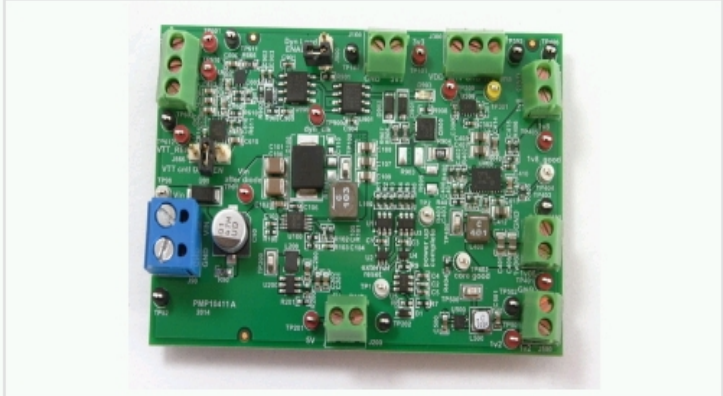

Cost-optimized power supply solution for entry-level application processor-based ADAS systems

Fully assembled board (shown above) developed for testing and performance validation only, not available for sale.

Description

The TIDA-00346 design provides the power supply rails necessary for typical entry-level application processors in automotive advanced driver assistance systems (ADAS) applications. The design uses several individual DC/DC voltage regulators as well as load switches and linear regulators (LDOs) to provide fixed-supply voltages to the processing cores and other functions of the system-on-a-chip (SoC). Additional rails for DDR memory supply and termination and a CAN Transceiver are also implemented. Two LM3880 simple power sequencers provide power up and power down sequencing. The design is optimized for automotive applications and can operate with input voltages from 4V to 18V (transients up to 40V).

Features

- Wide input voltage range from 4V to 42V (60V optional)
- Provides power supply rails for entry-level application processor-based ADAS systems
- Individual high-efficiency switching regulators for low power consumption and heat generation
- Voltage sequencing for all supply rails implemented on board
- Dedicated DDRx memory supply and termination available
- Circuit is tested and includes design considerations

TI's Standard Terms and Conditions for Evaluation Modules apply.

Schematic/Block Diagram

Quickly understand overall system functionality.

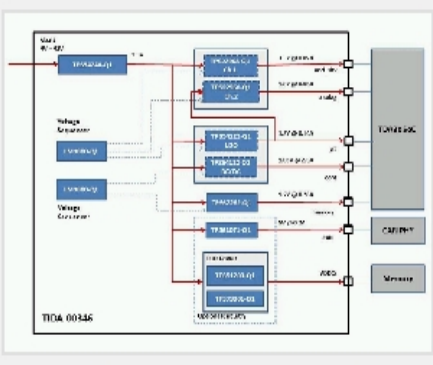

Download Schematic

Test Data

Get results faster with test and simulation data that's been verified.

Download Test Data

Design Files

Download ready-to-use system files to speed your design process. Get Viewer.

Download Design Files

Bill of Materials (BOM)

Find the complete list of components in this reference design.

Download BOM

TI Devices (7)

Order samples, get tools and find more information on the TI products in this reference design.

Part Number	Name	Product Family	Sample & Buy	Design Kits & Evaluation Modules
LM3880-Q1	Power Supply Sequencer	Power Management	Sample & Buy	View Design Kits & Evaluation Modules
TPS22968-Q1	5.5V 4A 27mΩ 2-Ch Automotive Load Switch with Quick Output Discharge & Adjustable Rise Time	Load Switches	Sample & Buy	View Design Kits & Evaluation Modules
TPS51200-Q1	Automotive Catalog Sink/Source DDR Termination Regulator	Power Management	Sample & Buy	Not Available
TPS54122-Q1	Dual Output, High Efficiency 3A Switcher + 3A Low Noise LDO for Automotive	Converter (Integrated Switch)	Sample & Buy	View Design Kits & Evaluation Modules
TPS54240-Q1	Automotive 3.5 to 42V Input, 2.5A, 2.5MHz Step-Down SWIFT™ Converter with Eco-Mode(TM)	Converter (Integrated Switch)	Sample & Buy	View Design Kits & Evaluation Modules
TPS61071-Q1	Automotive Cattalog Adjustable, 600-mA Switch, 90% Efficient PWM Boost Converter in ThinSOT-23	Converter (Integrated Switch)	Sample & Buy	Not Available
TPS62262-Q1	Automotive 2.25MHz 600mA Step-Down Converter in 2x2mm SON/TSOT23 Package	Converter (Integrated Switch)	Sample & Buy	Not Available

Show More

CAD/CAE symbols

Part #	Package | Pins	CAD File [.bxl]	STEP Model [.stp]
LM3880-Q1	SOT (DBV) | 6	Download	Download
TPS51200-Q1	VSON (DRC) | 10	Download	-
TPS54240-Q1	HVSSOP (DGQ) | 10	Download	-
TPS61071-Q1	SOT (DDC) | 6	Download	Download
TPS62262-Q1	WSON (DRV) | 6	Download	-

Texas Instruments and Accelerated Designs Inc. have collaborated together to provide TI customers with schematic symbols and PCB layout footprints for TI products.

Step 1: Download and install the Ultra Librarian software ZIP: 62MB

Step 2: Download the Symbol and Footprint .bxl file.

- read more -

Technical Documents

User guides (2)

Title	Abstract	Type	Size (KB)	Date	Views
TIDA-00346 Design Considerations		PDF	52	03 Mar 2015	0
TIDA-00346 Test Results		PDF	754	03 Mar 2015	0

Design files (3)

Title	Abstract	Type	Size (KB)	Date	Views
TIDA-00346 CAD Files		ZIP	731	03 Mar 2015	0
TIDA-00346 BOM		PDF	141	03 Mar 2015	0
TIDA-00346 Schematic		PDF	1162	03 Mar 2015	0

Applications

- Front Camera
- Long Range Radar (LRR)
- Surround View

Support & Community

TI E2E™ community

TI E2E™ Community

As a member of my.TI you can join the TI E2E™ Community where you can ask questions, share ideas and collaborate with fellow engineers and TI experts

Contents are provided "AS IS" by the respective TI and Community contributors and do not constitute TI specifications. See Terms of use.

Engage in the Community

- Amplifiers
- Broadband RF/IF & Digital Radio
- Clocks & Timers
- Data Converters
- DLP® & MEMS
- Interface
- Logic
- Power Management
- Wireless Connectivity

Wikis

Visit the TI Wiki

Other Support

- TI E2E Community
- Contact Technical Support

Your History

Products You Recently Viewed

- TIDA-00434
- TIDA-00510
- PMP10505
- TIDA-00595
- PMP4428

TI is a global semiconductor design and manufacturing company. Innovate with 100,000+ analog ICs and embedded processors, along with software, tools and the industry's largest sales/support staff.

© Copyright 1995-2015 Texas Instruments Incorporated. All rights reserved.
Trademarks | Privacy policy | Terms of use | Terms of sale