100% Pb-Free Synchronous Buck Converter Delivering 1V at 34A Reference Design

(ACTIVE) PMP10770

Description & Features | Technical Documents | Support & Community | Order Now

View the Important Notice for TI Designs covering authorized use, intellectual property matters and disclaimers.

Key Document

- PMP10770 Test Results (PDF 1018 KB) 04 Jun 2015

» View All Technical Documents (5)

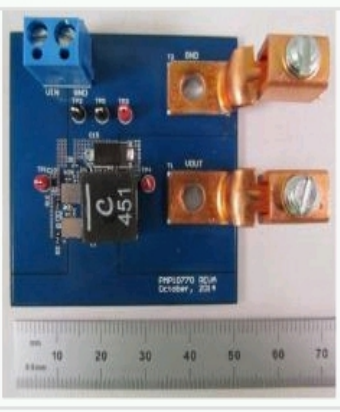

PMP10770 100% Pb-Free Synchronous Buck Converter Delivering 1V at 34A Reference Design Top of Board Design

Description

PMP10770 incorporates the TPS53219A and CSD87384M, which are the Green alternative to the TPS53355 30A dc/dc converter, and are 100% Pb-free. The design is for 10V-14V input, 1Voutput at 34A current with 83% efficiency at full load.

Fully assembled board (shown above) developed for testing and performance validation only, not available for sale.

Features

- 100% Pb free
- Green alternative to TPS53355
- 500KHz switching frequency
- 83% efficiency at full load of 34A
- Design length of 50mm
- 15.4mV output voltage ripple at 12VIN, and full load

TI's Standard Terms and Conditions for Evaluation Modules apply.

Schematic/Block Diagram

Quickly understand overall system functionality.

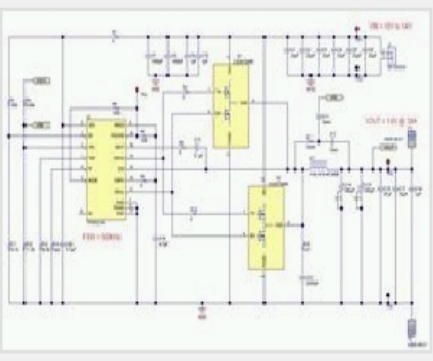

Download Schematic

Test Data

Get results faster with test and simulation data that's been verified.

Download Test Data

Design Files

Download ready-to-use system files to speed your design process. Get Viewer.

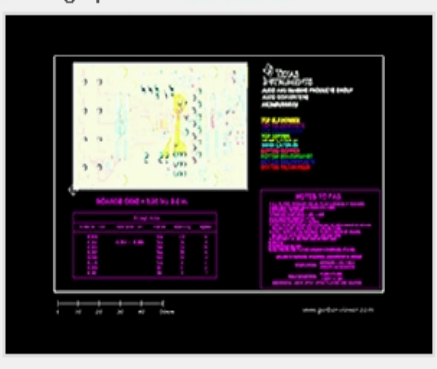

Download Design Files

Bill of Materials (BOM)

Find the complete list of components in this reference design.

Download BOM

Parametrics

	PMP10770
Vin (Min) (V)	8
Vin (Max) (V)	14
Vout (Nom) (V)	1
Iout (Max) (A)	34
Output Power	34
Isolated/Non-Isolated	Non-Isolated
Input Type	DC
Topology	Buck- Synchronous

TI Devices (2)

Order samples, get tools and find more information on the TI products in this reference design.

Part Number	Name	Product Family	Sample & Buy	Design Kits & Evaluation Modules
CSD87384M	Synchronous Buck NexFET Power Block II, CSD87384M	Power MOSFET	Sample & Buy	View Design Kits & Evaluation Modules
TPS53219A	Wide Input Voltage, Eco-Mode, Single Synchronous Step Controller	Controller (External Switch)	Sample & Buy	View Design Kits & Evaluation Modules

CAD/CAE symbols

Part #	Package | Pins	CAD File (.bxl)	STEP Model (.stp)
TPS53219A	VQFN (RGT) | 16	Download	-

Texas Instruments and Accelerated Designs Inc. have collaborated together to provide TI customers with schematic symbols and PCB layout footprints for TI products.

Step 1: Download and install the Ultra Librarian software ZIP: 62MB

Step 2: Download the Symbol and Footprint .bxl file.

- read more -

Technical Documents

User guides (1)

Title	Abstract	Type	Size (KB)	Date	Views	TI Recommends
PMP10770 Test Results		PDF	1018	04 Jun 2015	0	✓

Design files (4)

Title	Abstract	Type	Size (KB)	Date	Views
PMP10770 Gerber		ZIP	314	04 Jun 2015	0
PMP10770 Assembly Drawing		PDF	48	04 Jun 2015	0
PMP10770 BOM		PDF	113	04 Jun 2015	0
PMP10770 Schematic		PDF	116	04 Jun 2015	0

Applications

- Ethernet Switch

Support & Community

TI E2E™ community

TI E2E™ Community

As a member of my.TI you can join the TI E2E™ Community where you can ask questions, share ideas and collaborate with fellow engineers and TI experts

Contents are provided "AS IS" by the respective TI and Community contributors and do not constitute TI specifications. See Terms of use.

Engage in the Community

- Amplifiers
- Broadband RF/IF & Digital Radio
- Clocks & Timers
- Data Converters
- DLP® & MEMS
- Interface
- Logic
- Power Management
- Wireless Connectivity

Wikis

Visit the TI Wiki

Other Support

- TI E2E Community
- Contact Technical Support

Your History

Products You Recently Viewed

- PMP4408.2
- PMP7156
- TIDA-00400
- TIDA-00490
- PMP10509

TI is a global semiconductor design and manufacturing company. Innovate with 100,000+ analog ICs and embedded processors, along with software, tools and the industry's largest sales/support staff.

© Copyright 1995-2015 Texas Instruments Incorporated. All rights reserved.
Trademarks | Privacy policy | Terms of use | Terms of sale