8Vin to 16Vin, 12Vout @ 6A Non-Sync Buck Boost Converter

TIDesigns

(ACTIVE) PMP7988

Description & Features | Technical Documents | Support & Community | Order Now

View the Important Notice for TI Designs covering authorized use, intellectual property matters and disclaimers.

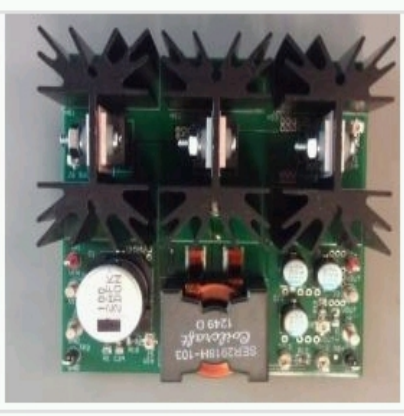

Description

PMP7988 is a non-sync buck boost converter. The design accepts an input voltage of 8Vin to 16Vin, with 12V nominal input and outputs 12V, capable of providing 6A of current to the load.

Features

- Non-Sync buck boost Converter
- 72 W Power Output
- Small solution size with high efficiency.

Fully assembled board (shown above) developed for testing and performance validation only, not available for sale.

TI's Standard Terms and Conditions for Evaluation Modules apply.

Schematic/Block Diagram

Quickly understand overall system functionality.

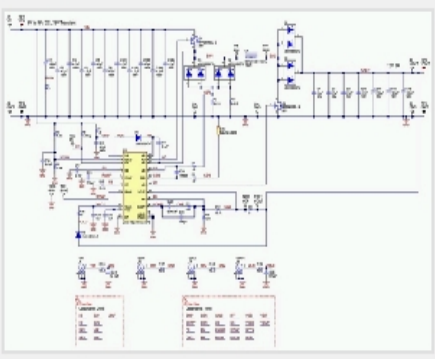

Download Schematic

Test Data

Get results faster with test and simulation data that's been verified.

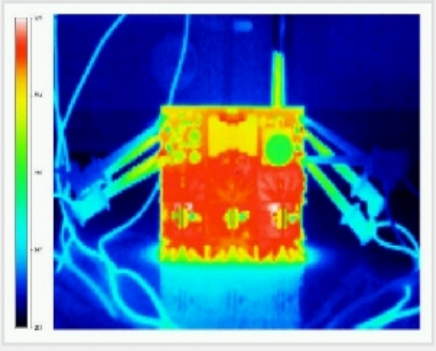

Download Test Data

Design Files

Download ready-to-use system files to speed your design process. Get Viewer.

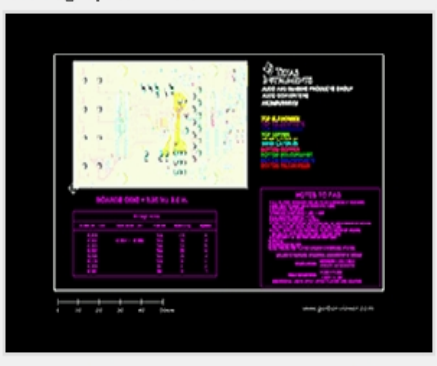

Download Design Files

Bill of Materials (BOM)

Find the complete list of components in this reference design.

Download BOM

Parametrics

	PMP7988
Vin (Min) (V)	8
Vin (Max) (V)	16
Vout (Nom) (V)	12
Iout (Max) (A)	6
Output Power	72
Isolated/Non-Isolated	Non-Isolated
Input Type	DC
Topology	Buck Boost- Non Sync

TI Devices (1)

Order samples, get tools and find more information on the TI products in this reference design.

Part Number	Name	Product Family	Sample & Buy	Design Kits & Evaluation Modules
LM5118	3-75V Wide Vin, Current Mode Non-Synchronous Buck-Boost Controller	Controller (External Switch)	Sample & Buy	View Design Kits & Evaluation Modules

CAD/CAE symbols

Part #	Package | Pins	CAD File (.bxl)	STEP Model (.stp)
LM5118	HTSSOP (PWP) | 20	Download	Download

Texas Instruments and Accelerated Designs Inc. have collaborated together to provide TI customers with schematic symbols and PCB layout footprints for TI products.

Step 1: Download and install the Ultra Librarian software ZIP: 62MB

Step 2: Download the Symbol and Footprint .bxl file.

- read more -

Technical Documents

User guides (1)

Title	Abstract	Type	Size (KB)	Date	Views
PMP7988 Test Results		PDF	938	07 Apr 2015	0

Design files (5)

Title	Abstract	Type	Size (KB)	Date	Views
PMP7988 Gerber		ZIP	79	07 Apr 2015	0
PMP7988 CAD Files		ZIP	482	07 Apr 2015	0
PMP7988 PCB		PDF	1037	07 Apr 2015	0
PMP7988 BOM		PDF	115	07 Apr 2015	0
PMP7988 Schematic		PDF	244	07 Apr 2015	0

Support & Community

TI E2E™ community

TI E2E™ Community

As a member of my.TI you can join the TI E2E™ Community where you can ask questions, share ideas and collaborate with fellow engineers and TI experts

Contents are provided "AS IS" by the respective TI and Community contributors and do not constitute TI specifications. See Terms of use.

Engage in the Community

- Amplifiers
- Broadband RF/IF & Digital Radio
- Clocks & Timers
- Data Converters
- DLP® & MEMS
- Interface
- Logic
- Power Management
- Wireless Connectivity

Wikis

Visit the TI Wiki

Other Support

- TI E2E Community
- Contact Technical Support

Your History

Products You Recently Viewed

- TIDA-00532
- PMP9491
- PMP9435
- PMP4465.3
- PMP9409

TI is a global semiconductor design and manufacturing company. Innovate with 100,000+ analog ICs and embedded processors, along with software, tools and the industry's largest sales/support staff.

© Copyright 1995-2015 Texas Instruments Incorporated. All rights reserved.
Trademarks | Privacy policy | Terms of use | Terms of sale