Wide Input Range (140Vac to 440Vac) Non Isolated Off-line Flyback Converter with Multiple Outputs

TIDesigns

(ACTIVE) PMP10055.1

Description & Features | Technical Documents | Support & Community | Order Now

View the Important Notice for TI Designs covering authorized use, intellectual property matters and disclaimers.

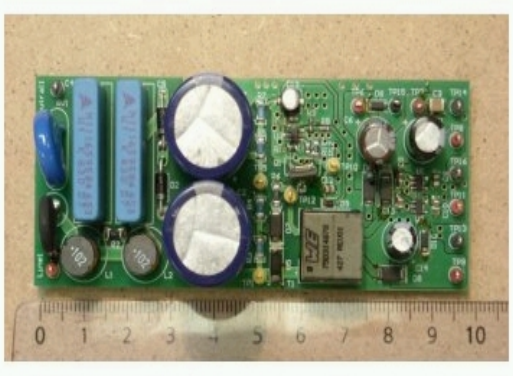

Wide Input Range (140Vac to 440Vac) Non Isolated Off-line Flyback Converter with Multiple Outputs Reference Design

Description

An energy metering device very often needs non-isolated power, since the neutral is connected to the ground of the output. This is a typical application, when 1.8V, 3.3V, 12V and 18V are needed to supply digital and analog loads. Even though a small transformer is employed, the PSU delivers 9Wpeak power.

Features

- Wide input voltage range (line-neutral and line-line)
- Covers single phase and three phase applications
- Small EP7 transformer
- Uses high electrolytic capacitance value for 500msec hold-up time

Fully assembled board (shown above) developed for testing and performance validation only, not available for sale.

TI's Standard Terms and Conditions for Evaluation Modules apply.

Schematic/Block Diagram

Quickly understand overall system functionality.

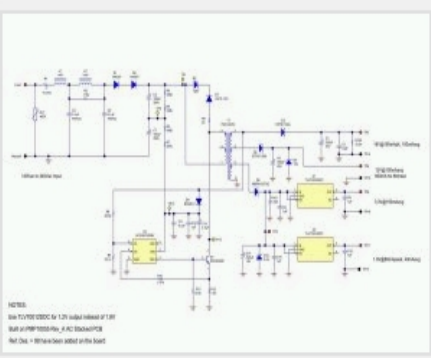

Download Schematic

Test Data

Get results faster with test and simulation data that's been verified.

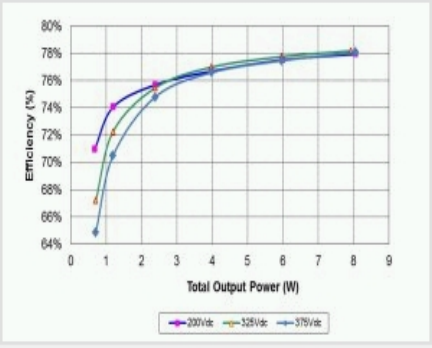

Download Test Data

Design Files

Download ready-to-use system files to speed your design process. Get Viewer.

Download Design Files

Bill of Materials (BOM)

Find the complete list of components in this reference design.

Download BOM

Parametrics

	PMP10055.1
Vin (Min) (V)	140
Vin (Max) (V)	440
Vout (Nom) (V)	18
Iout (Max) (A)	.16
Output Power	2.88
Isolated/Non-Isolated	Non-Isolated
Input Type	AC
Topology	Flyback- DCM

TI Devices (3)

Order samples, get tools and find more information on the TI products in this reference design.

Part Number	Name	Product Family	Sample & Buy	Design Kits & Evaluation Modules
TLV70018-Q1	Automotive 300mA, Low IQ, Low Dropout Regulator	Linear Regulator (LDO)	Sample & Buy	Not Available
TLV70033-Q1	Automotive 200mA, Low IQ, Low Dropout Regulator for Portables	Linear Regulator (LDO)	Sample & Buy	Not Available
UCC28722	Low Cost CVCC Flyback Controller with Primary-Side Regulation for Bipolar Power Device	AC/DC and Isolated DC/DC Power Supply	Sample & Buy	View Design Kits & Evaluation Modules

CAD/CAE symbols

Part #	Package | Pins	CAD File (.bxl)	STEP Model (.stp)
TLV70018-Q1	SOT (DDC) | 5	Download	-
TLV70033-Q1	SOT (DDC) | 5	Download	-

Texas Instruments and Accelerated Designs Inc. have collaborated together to provide TI customers with schematic symbols and PCB layout footprints for TI products.

Step 1: Download and install the Ultra Librarian software ZIP: 62MB

Step 2: Download the Symbol and Footprint .bxl file.

- read more -

Technical Documents

User guides (1)

Title	Abstract	Type	Size (KB)	Date	Views
PMP10055 Test Results		PDF	611	10 Apr 2015	0

Design files (4)

Title	Abstract	Type	Size (KB)	Date	Views
PMP10055 CAD Files		ZIP	351	10 Apr 2015	0
PMP10055 Assembly Drawing		PDF	490	10 Apr 2015	0
PMP10055 BOM		PDF	24	10 Apr 2015	0
PMP10055 Schematic		PDF	181	10 Apr 2015	0

Applications

- Power Quality Meter

Support & Community

TI E2E™ community

TI E2E™ Community

As a member of my.TI you can join the TI E2E™ Community where you can ask questions, share ideas and collaborate with fellow engineers and TI experts

Contents are provided "AS IS" by the respective TI and Community contributors and do not constitute TI specifications. See Terms of use.

Engage in the Community

- Amplifiers
- Broadband RF/IF & Digital Radio
- Clocks & Timers
- Data Converters
- DLP® & MEMS
- Interface
- Logic
- Power Management
- Wireless Connectivity

Wikis

Visit the TI Wiki

Other Support

- TI E2E Community
- Contact Technical Support

Your History

Products You Recently Viewed

- PMP10101.1
- PMP7988
- TIDA-00532
- PMP9491
- PMP9435

TI is a global semiconductor design and manufacturing company. Innovate with 100,000+ analog ICs and embedded processors, along with software, tools and the industry's largest sales/support staff.

© Copyright 1995-2015 Texas Instruments Incorporated. All rights reserved.
Trademarks | Privacy policy | Terms of use | Terms of sale