Triple Output Isolated Fly-Buck Power Supply for Industrial Application Reference Design

(ACTIVE) PMP10516

Description & Features | Technical Documents | Support & Community | Order Now

View the Important Notice for TI Designs covering authorized use, intellectual property matters and disclaimers.

Description

PMP10516 is an Isolated Flybuck Converter using the LM25017 regulator IC. The design accepts an input voltage of 20.4Vin to 28.8Vin (40Vin Max. Peak) and provides three isolated outputs. The +5Vout rail is regulated for precision using the LP2951 linear regulator.

Features

- Multiple isolated outputs
- Primary side regulation without opto, good cross regulation, within +/-5%
- Low BOM count & cost, compact solution size
- Constant On Time control, no loop compensation required, and fast transient response
- LM25017 wide vin range

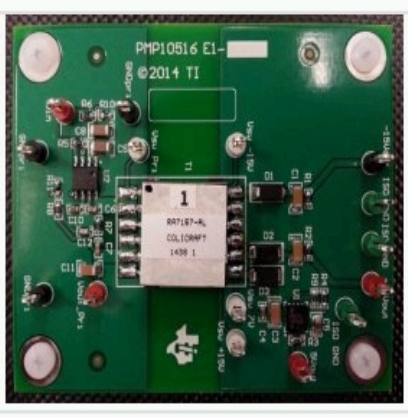

Triple Output Isolated Fly-Buck Power Supply for Industrial Application Reference Design (top view)

Fully assembled board (shown above) developed for testing and performance validation only, not available for sale.

TI's Standard Terms and Conditions for Evaluation Modules apply.

Schematic/Block Diagram

Quickly understand overall system functionality.

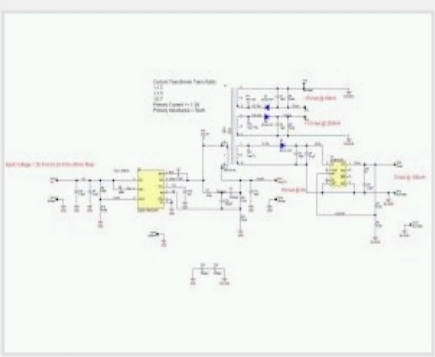

Download Schematic

Test Data

Get results faster with test and simulation data that's been verified.

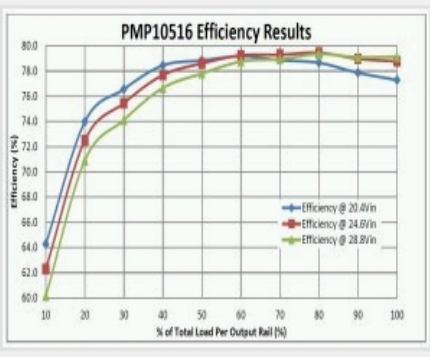

Download Test Data

Design Files

Download ready-to-use system files to speed your design process. Get Viewer.

Download Design Files

Bill of Materials (BOM)

Find the complete list of components in this reference design.

Download BOM

Parametrics

	PMP10516
Vin (Min) (V)	20.4
Vin (Max) (V)	28.8
Vout (Nom) (V)	15
Iout (Max) (A)	.2
Output Power	3
Isolated/Non-Isolated	Isolated
Input Type	DC
Topology	Flybuck

TI Devices (2)

Order samples, get tools and find more information on the TI products in this reference design.

Part Number	Name	Product Family	Sample & Buy	Design Kits & Evaluation Modules
LM25017	7.5-48V Wide Vin, 650mA Constant On-Time Synchronous Buck Regulator	Converter (Integrated Switch)	Sample & Buy	View Design Kits & Evaluation Modules
LP2951	Single Output LDO, 100mA, Adjustable, Wide Vin Range, RESET Flag	Linear Regulator (LDO)	Sample & Buy	Not Available

CAD/CAE symbols

Part #	Package | Pins	CAD File (.bxl)	STEP Model (.stp)
LM25017	HSOP (DDA) | 8	Download	Download
	WSON (NGU) | 8	Download	Download
LP2951	SOIC (D) | 8	Download	Download
	VSSOP (DGK) | 8	Download	-

Texas Instruments and Accelerated Designs Inc. have collaborated together to provide TI customers with schematic symbols and PCB layout footprints for TI products.

Step 1: Download and install the Ultra Librarian software ZIP: 62MB

Step 2: Download the Symbol and Footprint .bxl file.

- read more -

Technical Documents

User guides (1)

Title	Abstract	Type	Size (KB)	Date	Views
PMP10516 Test Results		PDF	1304	15 May 2015	0

Design files (6)

Title	Abstract	Type	Size (KB)	Date	Views
PMP10516 Gerber		ZIP	176	15 May 2015	0
PMP10516 CAD Files		ZIP	364	15 May 2015	0
PMP10516 PCB		PDF	680	15 May 2015	0
PMP10516 Assembly Drawing		PDF	97	15 May 2015	0
PMP10516 BOM		PDF	118	15 May 2015	0
PMP10516 Schematic		PDF	287	15 May 2015	0

Support & Community

TI E2E™ community

TI E2E™ Community

As a member of my.TI you can join the TI E2E™ Community where you can ask questions, share ideas and collaborate with fellow engineers and TI experts

Contents are provided "AS IS" by the respective TI and Community contributors and do not constitute TI specifications. See Terms of use.

Engage in the Community

- Amplifiers
- Broadband RF/IF & Digital Radio
- Clocks & Timers
- Data Converters
- DLP® & MEMS
- Interface
- Logic
- Power Management
- Wireless Connectivity

Wikis

Visit the TI Wiki

Other Support

- TI E2E Community
- Contact Technical Support

Your History

Products You Recently Viewed

- PMP4408.1
- PMP10130
- PMP10276
- PMP10101
- PMP10070

TI is a global semiconductor design and manufacturing company. Innovate with 100,000+ analog ICs and embedded processors, along with software, tools and the industry's largest sales/support staff.

© Copyright 1995-2015 Texas Instruments Incorporated. All rights reserved.
Trademarks | Privacy policy | Terms of use | Terms of sale