5V/1.6A & 12V/10mA AC/DC Flyback PSU for E-meter Apps Optimized for Low AC Line Input Ref Design

TIDesigns

(ACTIVE) TIDA-00583.1

Description & Features | Technical Documents | Support & Community | Order Now

View the Important Notice for TI Designs covering authorized use, intellectual property matters and disclaimers.

Key Document

- TIDA-00583 Test Results (PDF 3127 KB) 08 Jun 2015

» View All Technical Documents (4)

TIDA-00583.1 5V/1.6A & 12V/10mA AC/DC Flyback PSU for E-meter Apps Optimized for Low AC Line Input Ref Design Top of Board

Fully assembled board (shown above) developed for testing and performance validation only, not available for sale.

Description

The TIDA-00583 design is a Flyback converter which can operate in very low AC line input (Minimum 45Vac) and provide a regulated, fully-isolated 5V@1.6A output for communication model of E-meter, as well as another low-power 12V non-isolated output. Featuring TIs UCC28722 PSR controller which provides accurate voltage and constant current regulation with primary-side feedback, and bipolar power switch the design eliminates opto-coupler feedback circuits and reduces system cost.

Features

- Wide Input range from 45Vac to 265Vac
- Multi outputs with 5V/1.6A (2.2A peak) and 12V/10mA(non-isolated)
- Average 4-point efficiency of 73.8% or higher
- 72% or higher efficiency at full power (5V/2.2A)
- Low output ripple at full load, less than 150mV
- Low system cost due to use of PSR control, BJT switch and single layer PCB

TI's Standard Terms and Conditions for Evaluation Modules apply.

Schematic/Block Diagram

Quickly understand overall system functionality.

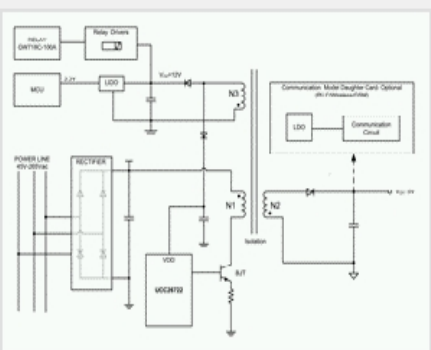

Download Schematic

Design Guide

Get results faster with test and simulation data that's been verified.

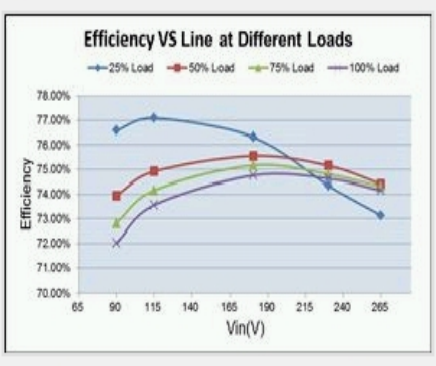

Download Design Guide

Design Files

Download ready-to-use system files to speed your design process. Get Viewer.

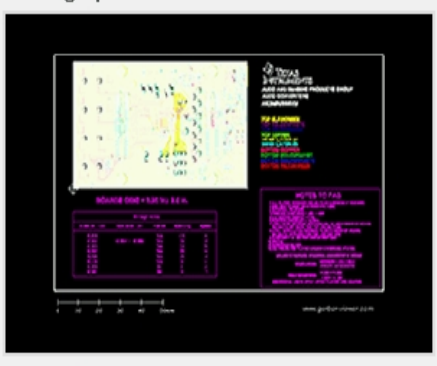

Download Design Files

Bill of Materials (BOM)

Find the complete list of components in this reference design.

Download BOM

Parametrics

	TIDA-00583.1
Vin (Min) (V)	45
Vin (Max) (V)	265
Vout (Nom) (V)	5
Iout (Max) (A)	1.6
Output Power	8
Isolated/Non-Isolated	Isolated
Input Type	AC
Topology	Flyback- DCM

TI Devices (1)

Order samples, get tools and find more information on the TI products in this reference design.

Part Number	Name	Product Family	Sample & Buy	Design Kits & Evaluation Modules
UCC28722	Low Cost CVCC Flyback Controller with Primary-Side Regulation for Bipolar Power Device	AC/DC and Isolated DC/DC Power Supply	Sample & Buy	View Design Kits & Evaluation Modules

Technical Documents

User guides (1)

Title	Abstract	Type	Size (KB)	Date	Views	TI Recommends
TIDA-00583 Test Results		PDF	3127	08 Jun 2015	0	✓

Design files (3)

Title	Abstract	Type	Size (KB)	Date	Views
TIDA-00583 Gerber		ZIP	228	08 Jun 2015	0
TIDA-00583 BOM		PDF	85	08 Jun 2015	0
TIDA-00583 Schematic		PDF	238	08 Jun 2015	0

Support & Community

TI E2E™ community

TI E2E™ Community

As a member of my.TI you can join the TI E2E™ Community where you can ask questions, share ideas and collaborate with fellow engineers and TI experts

Contents are provided "AS IS" by the respective TI and Community contributors and do not constitute TI specifications. See Terms of use.

Engage in the Community

- Amplifiers
- Broadband RF/IF & Digital Radio
- Clocks & Timers
- Data Converters
- DLP® & MEMS
- Interface
- Logic
- Power Management
- Wireless Connectivity

Wikis

Visit the TI Wiki

Other Support

- TI E2E Community
- Contact Technical Support

Your History

Products You Recently Viewed

- TIDA-00328
- PMP10487
- PMP10135
- TIDA-00520
- PMP9700

TI is a global semiconductor design and manufacturing company. Innovate with 100,000+ analog ICs and embedded processors, along with software, tools and the industry's largest sales/support staff.

© Copyright 1995-2015 Texas Instruments Incorporated. All rights reserved.
Trademarks | Privacy policy | Terms of use | Terms of sale