Reference Design - DDR3/DDR4 Power Supply with 5V Input and 10A Load for Industrial PCs

TIDesigns

(ACTIVE) PMP10029

Description & Features | Technical Documents | Support & Community | Order Now

View the Important Notice for TI Designs covering authorized use, intellectual property matters and disclaimers.

Description

This reference design shows a universal power supply solution for DDR3 and DDR4 memory. A synchronous Buck converter provides an output voltage of 1.35V for a 9A load in DDR3L configuration. A linear regulator provides a second voltage of 0.675V for a 2A load.

Features

- Built and tested
- Solution for DDR3, DDR3L, DDR3U and DDR4 by adjusting just a single resistor
- High efficiency
- Very good dynamic performance
- Headroom for transients
- Very low ripple

Reference Design - DDR3/DDR4 Power Supply with 5V Input and 10A Load for Industrial PCs

Fully assembled board (shown above) developed for testing and performance validation only, not available for sale.

TI's Standard Terms and Conditions for Evaluation Modules apply.

Schematic/Block Diagram

Quickly understand overall system functionality.

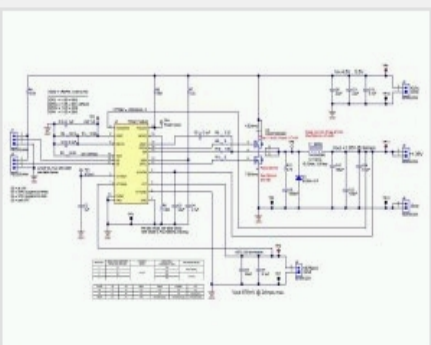

Download Schematic

Test Data

Get results faster with test and simulation data that's been verified.

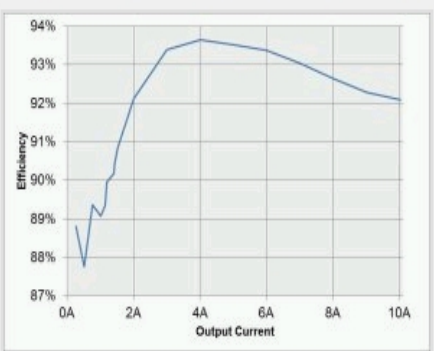

Download Test Data

Design Files

Download ready-to-use system files to speed your design process. Get Viewer.

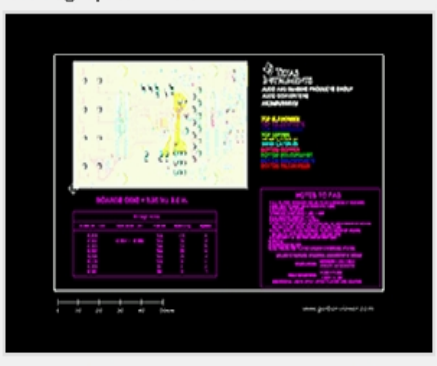

Download Design Files

Bill of Materials (BOM)

Find the complete list of components in this reference design.

Download BOM

Parametrics

	PMP10029
Vin (Min) (V)	4.5
Vin (Max) (V)	5.5
Vout (Nom) (V)	1.35
Iout (Max) (A)	9
Output Power	12.15
Isolated/Non-Isolated	Non-Isolated
Input Type	DC
Topology	Buck- Synchronous

TI Devices (2)

Order samples, get tools and find more information on the TI products in this reference design.

Part Number	Name	Product Family	Sample & Buy	Design Kits & Evaluation Modules
CSD87350Q5D	Synchronous Buck NexFET™ Power Block MOSFET Pair	Power MOSFET	Sample & Buy	View Design Kits & Evaluation Modules
TPS51716	Complete DDR2, DDR3, and DDR3L Memory Power Solution Synchronous Buck Controller, 2-A LDO	Power Management	Sample & Buy	Not Available

CAD/CAE symbols

Part #	Package | Pins	CAD File (.bxl)	STEP Model (.stp)
CSD87350Q5D	LSON-CLIP (DQY)| 8	Download	-
TPS51716	WQFN (RUK) | 20	Download	-

Texas Instruments and Accelerated Designs Inc. have collaborated together to provide TI customers with schematic symbols and PCB layout footprints for TI products.

Step 1: Download and install the Ultra Librarian software ZIP: 62MB

Step 2: Download the Symbol and Footprint .bxl file.

- read more -

Technical Documents

User guides (1)

Title	Abstract	Type	Size (KB)	Date	Views
PMP10029 Test Results		PDF	736	14 Apr 2015	0

Design files (3)

Title	Abstract	Type	Size (KB)	Date	Views
PMP10029 PCB		PDF	432	14 Apr 2015	0
PMP10029 BOM		PDF	18	14 Apr 2015	0
PMP10029 Schematic		PDF	176	14 Apr 2015	0

Support & Community

TI E2E™ community

TI E2E™ Community

As a member of my.TI you can join the TI E2E™ Community where you can ask questions, share ideas and collaborate with fellow engineers and TI experts

Contents are provided "AS IS" by the respective TI and Community contributors and do not constitute TI specifications. See Terms of use.

Engage in the Community

- Amplifiers
- Broadband RF/IF & Digital Radio
- Clocks & Timers
- Data Converters
- DLP® & MEMS
- Interface
- Logic
- Power Management
- Wireless Connectivity

Wikis

Visit the TI Wiki

Other Support

- TI E2E Community
- Contact Technical Support

Your History

Products You Recently Viewed

- PMP8750.1
- PMP10002
- TIDA-00583.1
- TIDA-00328
- PMP10487

TI is a global semiconductor design and manufacturing company. Innovate with 100,000+ analog ICs and embedded processors, along with software, tools and the industry's largest sales/support staff.

© Copyright 1995-2015 Texas Instruments Incorporated. All rights reserved.
Trademarks | Privacy policy | Terms of use | Terms of sale