High-Efficiency Single-Phase Synchronous Boost Conv for Automotive Infotainment Reference Design

(ACTIVE) PMP10503

Description & Features | Technical Documents | Support & Community | Order Now

View the Important Notice for TI Designs covering authorized use, intellectual property matters and disclaimers.

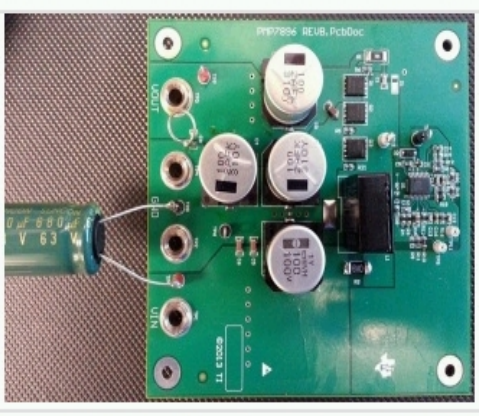

LM10503 Top of Board

Fully assembled board (shown above) developed for testing and performance validation only, not available for sale.

Description

PMP10503 is a Single-Phase Synchronous Boost Converter using the LM5122 controller IC. The design accepts an input voltage of 7Vin to 36Vin (14Vin Nominal) and provides an output of 48Vout capable of supplying 1A of continuous current to the load. The design was built on the PMP7896 RevB PCB, which was modified to the PMP10503 design configuration and requirements.

Features

- High efficiency design
- High power density: 48W/15.2 Sq. inches
- Synchronizable to external clock
- Cycle-by-Cycle Current limit with programmable hiccup mode overload protection
- Bypass mode capable when Vin > Vout
- Low component temperature rise at nominal power operation

TI's Standard Terms and Conditions for Evaluation Modules apply.

Schematic/Block Diagram

Quickly understand overall system functionality.

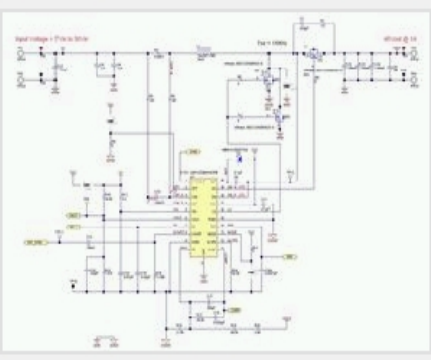

Download Schematic

Test Data

Get results faster with test and simulation data that's been verified.

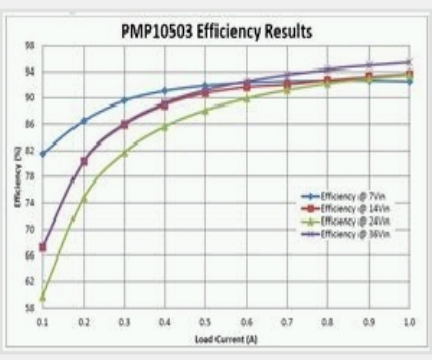

Download Test Data

Design Files

Download ready-to-use system files to speed your design process. Get Viewer.

Download Design Files

Bill of Materials (BOM)

Find the complete list of components in this reference design.

Download BOM

Parametrics

	PMP10503
Vin (Min) (V)	7
Vin (Max) (V)	36
Vout (Nom) (V)	48
Iout (Max) (A)	1
Output Power	48
Isolated/Non-Isolated	Non-Isolated
Input Type	DC
Topology	Boost- Synchronous

TI Devices (1)

Order samples, get tools and find more information on the TI products in this reference design.

Part Number	Name	Product Family	Sample & Buy	Design Kits & Evaluation Modules
LM5122-Q1	Automotive Grade, 3-65V Wide Vin, Current Mode Synchronous Boost Controller with Multiphase Capabili	Controller (External Switch)	Sample & Buy	View Design Kits & Evaluation Modules

Technical Documents

User guides (1)

Title	Abstract	Type	Size (KB)	Date	Views
PMP10503 Test Results		PDF	1491	16 Apr 2015	0

Design files (6)

Title	Abstract	Type	Size (KB)	Date	Views
PMP10503 Gerber (from PMP7896)		ZIP	206	16 Apr 2015	0
PMP10503 CAD Files		ZIP	466	16 Apr 2015	0
PMP10503 PCB (from PMP7896)		PDF	339	16 Apr 2015	0
PMP10503 Assembly Drawing (from PMP7896)		PDF	108	16 Apr 2015	0
PMP10503 BOM		PDF	124	16 Apr 2015	0
PMP10503 Schematic		PDF	335	16 Apr 2015	0

Applications

- Digital Radio

Support & Community

TI E2E™ community

TI E2E™ Community

As a member of my.TI you can join the TI E2E™ Community where you can ask questions, share ideas and collaborate with fellow engineers and TI experts

Contents are provided "AS IS" by the respective TI and Community contributors and do not constitute TI specifications. See Terms of use.

Engage in the Community

- Amplifiers
- Broadband RF/IF & Digital Radio
- Clocks & Timers
- Data Converters
- DLP® & MEMS
- Interface
- Logic
- Power Management
- Wireless Connectivity

Wikis

Visit the TI Wiki

Other Support

- TI E2E Community
- Contact Technical Support

Your History

Products You Recently Viewed

- PMP10618
- PMP10029
- PMP8750.1
- PMP10002
- TIDA-00583.1

TI is a global semiconductor design and manufacturing company. Innovate with 100,000+ analog ICs and embedded processors, along with software, tools and the industry's largest sales/support staff.

© Copyright 1995-2015 Texas Instruments Incorporated. All rights reserved.
Trademarks | Privacy policy | Terms of use | Terms of sale