33W Offline QR Flyback Converter with Multiple Outputs Reference Design

TIDesigns

(ACTIVE) PMP10020

Description & Features | Technical Documents | Support & Community | Order Now

View the Important Notice for TI Designs covering authorized use, intellectual property matters and disclaimers.

Description

This design uses the UCC28610 quasi-resonant flyback controller to generate 3 isolated outputs from an universal input (90VAC - 290VAC). It was built on a low cost single layer PCB. The regulated output provides 12V@1.89A and the maximum output power is 33W.

Features

- Universal input voltage
- Valley switching
- Multiple outputs
- Single Layer PCB

TI's Standard Terms and Conditions for Evaluation Modules apply.

33W Offline QR Flyback Converter with Multiple Outputs Reference Design (top view)

Fully assembled board (shown above) developed for testing and performance validation only, not available for sale.

Schematic/Block Diagram

Quickly understand overall system functionality.

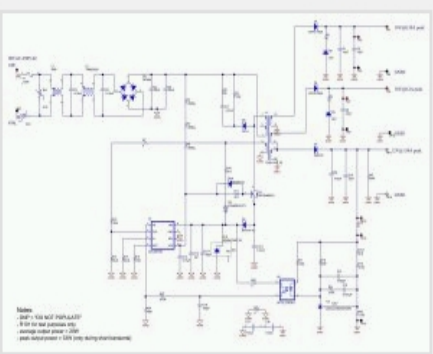

Download Schematic

Test Data

Get results faster with test and simulation data that's been verified.

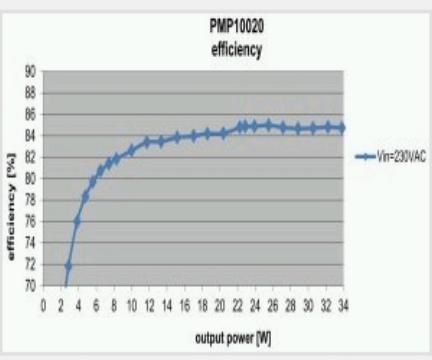

Download Test Data

Design Files

Download ready-to-use system files to speed your design process. Get Viewer.

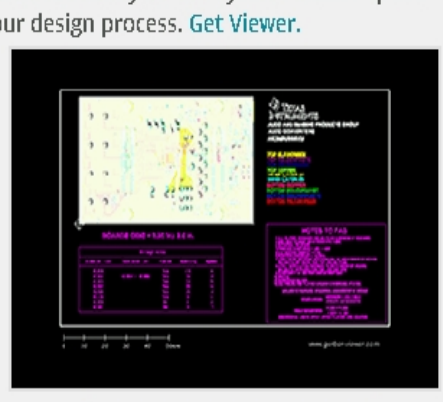

Download Design Files

Bill of Materials (BOM)

Find the complete list of components in this reference design.

Download BOM

Parametrics

	PMP10020
Vin (Min) (V)	90
Vin (Max) (V)	290
Vout (Nom) (V)	12
Iout (Max) (A)	1.89
Output Power	22.68
Isolated/Non-Isolated	Isolated
Input Type	AC
Topology	Flyback- Quasi Resonant

TI Devices (2)

Order samples, get tools and find more information on the TI products in this reference design.

Part Number	Name	Product Family	Sample & Buy	Design Kits & Evaluation Modules
LMV431A	Low-Voltage (1.24V) Adjustable Precision Shunt Regulators	Voltage Reference	Sample & Buy	Not Available
UCC28610	12-65W Green-mode Flyback Power Supply Controller	AC/DC and Isolated DC/DC Power Supply	Sample & Buy	View Design Kits & Evaluation Modules

CAD/CAE symbols

Part #	Package | Pins	CAD File (.bxl)	STEP Model (.stp)
LMV431A	SOT (DBZ) | 3	Download	Download
	TO-92 (LP) | 3	Download	Download
UCC28610	SOIC (D) | 8	Download	Download
	PDIP (P) | 8	Download	Download

Texas Instruments and Accelerated Designs Inc. have collaborated together to provide TI customers with schematic symbols and PCB layout footprints for TI products.

Step 1: Download and install the Ultra Librarian software ZIP: 62MB

Step 2: Download the Symbol and Footprint .bxl file.

- read more -

Technical Documents

User guides (1)

Title	Abstract	Type	Size (KB)	Date	Views
PMP10020 Test Results		PDF	810	14 Apr 2015	0

Design files (3)

Title	Abstract	Type	Size (KB)	Date	Views
PMP10020 CAD Files		ZIP	340	14 Apr 2015	0
PMP10020 BOM		PDF	100	14 Apr 2015	0
PMP10020 Schematic		PDF	81	14 Apr 2015	0

Support & Community

TI E2E™ community

TI E2E™ Community

As a member of my.TI you can join the TI E2E™ Community where you can ask questions, share ideas and collaborate with fellow engineers and TI experts

Contents are provided "AS IS" by the respective TI and Community contributors and do not constitute TI specifications. See Terms of use.

Engage in the Community

- Amplifiers
- Broadband RF/IF & Digital Radio
- Clocks & Timers
- Data Converters
- DLP® & MEMS
- Interface
- Logic
- Power Management
- Wireless Connectivity

Wikis

Visit the TI Wiki

Other Support

- TI E2E Community
- Contact Technical Support

Your History

Products You Recently Viewed

- PMP8923
- PMP10004
- TIDA-00237
- PMP10020.1
- PMP9474

TI is a global semiconductor design and manufacturing company. Innovate with 100,000+ analog ICs and embedded processors, along with software, tools and the industry's largest sales/support staff.

© Copyright 1995-2015 Texas Instruments Incorporated. All rights reserved.
Trademarks | Privacy policy | Terms of use | Terms of sale